1981 CHEVROLET EL CAMINO

ALPHABETICAL OPTION INDEX

(Not for ordering purposes)

Option Number	Description
AG9	SEAT, POWER: Six-Way
AU3	DOOR LOCK SYSTEM, POWER
AV3	TIE-DOWNS, CARGO BOX
A01	GLASS, TINTED: All Windows
A31	WINDOWS, POWER
BW2	MOLDINGS: Body Side, Deluxe
BX8	MOLDINGS: Front Fender, Body Side and Tailgate
B3W	PRELIMINARY PRICE INFORMATION
B32	FLOOR COVERING: Mats, Color-Keyed Floor
B93	MOLDINGS: Door Edge Guard
CD4	WINDSHIELD WIPER SYSTEM: Intermittent
C60	AIR CONDITIONING
D33	MIRROR: Outside Rearview, LH Remote Control
D35	MIRRORS: Sport, LH Remote and RH Manual
D55	CONSOLE
D60	NON-RECOMMENDED COLOR COMBINATION
D68	MIRRORS: Sport, Twin Remote
D73	RAILS, CARGO BOX SIDE
D91	CONQUISTA
F41	SUSPENSION, SPORT
G80	AXLE, REAR: Limited Slip Differential
G92	AXLE, REAR: Performance Ratio
K35	SPEED CONTROL WITH RESUME SPEED: Automatic
K81	GENERATOR: 63-Amp Delcotron
LC3	ENGINE: 3.8 Liter 2 BBL V6
LD5	ENGINE: 3.8 Liter 2 BBL V6
LG4	ENGINE: 5.0 Liter 4 BBL V8
L39	ENGINE: 4.4 Liter 2 BBL V8
MM3	TRANSMISSION: 3-Speed Manual
MM4	TRANSMISSION: 4-Speed Manual
MX1	TRANSMISSION: Automatic
NA5	EMISSION SYSTEMS: Standard Emission Equipment
N18	WHEEL COVER LOCKING PACKAGE
N23	TANK, FUEL: 22 Gallons
N33	STEERING WHEEL: Comfortilt
N95	WHEEL TRIM: Wheel Covers, Wire
PB2	WHEEL TRIM: Wheel Covers, Sport (Silver)
QXX	TIRES: P205/75 R-14 Blackwall (Radial)
QXY	TIRES: P205/75 R-14 Whitewall (Radial)
QXZ	TIRES: P205/75 R-14 White Lettered (Radial)
TR9	LIGHTING, AUXILIARY
TT4	HEADLAMPS, HALOGEN
UA1	BATTERY, HEAVY-DUTY
UF7	GAGE PACKAGE WITH TRIP ODOMETER
UM2	RADIO EQUIPMENT: AM/FM Stereo Radio with 8-Track Stereo Tape
UN3	RADIO EQUIPMENT: AM/FM Stereo Radio with Stereo Cassette Tape
UP6	RADIO EQUIPMENT: AM/FM Stereo/Citizens Band Radio with Power Antenna
U14	INSTRUMENTATION: Special
U35	CLOCK: Electric
U58	RADIO EQUIPMENT: AM/FM Stereo Radio
U63	RADIO EQUIPMENT: AM Radio
U69	RADIO EQUIPMENT: AM/FM Radio
U75	RADIO EQUIPMENT: Power Antenna
U76	RADIO EQUIPMENT: Windshield Antenna
VE5	BUMPER EQUIPMENT: Bumper Rub Strips
V08	COOLING, HEAVY-DUTY
V30	BUMPER EQUIPMENT: Bumper Guards. Front and Rear
YF5	EMISSION SYSTEMS: California Emission Requirements
ZJ7	WHEEL TRIM: Wheels, Rally
Z15	SUPER SPORT (Model Option)
Z16	ROYAL KNIGHT
11K	COVER, CARGO BOX TONNEAU: White
19K	COVER, CARGO BOX TONNEAU: Black
11M	ACCENT COLOR: White
16M	ACCENT COLOR: Silver Metallic
19M	ACCENT COLOR: Black
21M	ACCENT COLOR: Light Blue Metallic
22M	ACCENT COLOR: Medium Blue Metallic
29M	ACCENT COLOR: Dark Blue Metallic
35M	ACCENT COLOR: Cream
36M	ACCENT COLOR: Champagne Metallic
68M	ACCENT COLOR: Light Brown Metallic
69M	ACCENT COLOR: Medium Brown Metallic
72M	ACCENT COLOR: Light Maroon Metallic
77M	ACCENT COLOR: Maroon Metallic
55P	WHEEL TRIM: Wheel Covers, Sport (Gold)

COLOR AND TRIM SELECTION

PLEASE NOTE: The exterior and interior combinations shown in the chart below are the only combinations that are available. **(D60 Non-Recommended color combination not permitted)**

Interior Trim Color		Dk. Blue	Camel	Champagne
MODEL	**SEAT TYPE**			
1AW80-D91	Cloth Bench	CDD1	CCC1	
	Cloth Bucket	CDD2	CCC2	
	Cloth 55/45	CDD3	CCC3	
	Vinyl Bench	VDD1	VCC[illegible]	[illegible]
	Vinyl Bucket	VDD2	V[illegible]	[illegible]RR2
	Vinyl 55/45	VDD3		VRR3

Roof and Lower Body	L	U	#Hood and Center Body					
Beige	63	63	Maroon (Met)	77M		R		
Beige	63	63	Lt Brown (Met)	68M		R		
Black	19	19	Champagne (Met)	36[illegible]			R	
Black	19	19	Lt Maroon (Met)	[illegible]				R
Black	19	19	Silver (Met)	[illegible]				R
Blue, Dark (Met)	29	29	Lt Blue (Met)	21M	R			
Blue, Dark (Met)	29	29	Silver (Met)	16M	R			
Brown, Light (Met)	68	68	Med Brown (Met)	69M		R		
Brown, Medium (Met)	69	69	Black	19M		R		
Champagne (Met)	36	36	Cream	35M			R	
Maroon, Light (Met)	72	72	Maroon (Met)	77M				R
Maroon Light (Met)	72	72	White	11M				R
Maroon (Met)	77	77	Silver (Met)	16M				R
Silver (Met)	16	16	Lt Maroon (Met)	72M				R
White	11	11	Blue (Met)	22M	R			

L = Lower U = Upper
#Must be Ordered

POWER TEAMS

(Refer to next page for option availability and application)

ENGINE OPTION CONDITION		AXLE RATIO			
		2.41	2.56	2.73	3.08
WITH NA5 STANDARD EMISSIONS					
LC3	MM3 or MX1	—	—	Std	—
L39	MX1	—	Std	—	—
LG4	MM4	—	—	—	Std
	MX1	Std	—	G92	—
WITH YF5 CALIFORNIA EMISSIONS					
LD5	MX1	—	—	Std	—
LG4	MX1	Std	—	G92	—

EL CAMINO CONQUISTA

REFER WEEKLY STOPS/LATEST UPDATE

MODEL

1AW80 El Camino Conquista

FEATURE OPTION:

_____D91 Conquista *(Incls Special Two-Tone Paint Treatment and Front Fender, Body Side and Tailgate Moldings)*

EMISSION SYSTEMS: MUST ORDER ONE (See Power Teams)

_____**NA5 Standard Emission Equipment**

_____**YF5 California Emission Requirements**

ENGINES: MUST ORDER ONE

AVAILABLE WITH NA5 STANDARD EMISSION EQUIPMENT

_____LC3 3.8 Liter 2 BBL V6
_____L39 4.4 Liter 2 BBL V8 *(Reqs MX1 Trans)*
_____LG4 5.0 Liter 4 BBL V8

AVAILABLE WITH YF5 CALIFORNIA EMISSION REQUIREMENTS

_____LD5 3.8 Liter 2 BBL V6 *(Reqs MX1 Trans)*
_____LG4 5.0 Liter 4 BBL V8 *(Reqs MX1 Trans)*

QUICK-SPEC

IF TIRE AND/OR TRANSMISSION IN QUICK-SPEC IS NOT DESIRED YOU **MUST** "PLUS" ANOTHER TIRE AND/OR TRANSMISSION OPTION.		4 9 6 A	4 9 7 A	4 9 8 A	4 9 9 A
Conquista	D91	x	x	x	x
Air Conditioning	C60	x	x	x	x
Console (w/Bucket Seats Only)	D55	x	x	x	x
Glass, Tinted	A01	x	x	x	x
Mats, Color-Keyed Floor	B32	x	x	x	x
Radio, AM	U63	x	x	N/I	N/I
Tires, P205/75 R-14 Whitewall	QXY	x	x	x	x
Transmission, Automatic	MX1	x	x	x	x
Wheels, Rally	ZJ7	x	x	x	x
Bumper Rub Strips	VE5		x	x	x
Clock, Electric	U35		x	N/I	N/I
Guards, Bumper	V30		x	x	x
Mirrors, LH Remote and RH Manual	D35		x	x	N/I
Moldings, Door Edge Guard	B93		x	x	x
Speed Control with Resume Speed	K35		x	x	x
Steering Wheel, Comfortilt	N33		x	x	x
Tank, Fuel	N23		x	x	x
Door Lock System, Power	AU3			x	x
Gage Package with Trip Odometer	UF7			x	N/I
Lighting, Auxiliary	TR9			x	x
Cooling, Heavy-Duty	V08			x	x
Radio, AM/FM	U69			x	N/I
Rails, Cargo Box Side	D73			x	x
W/S Wiper System, Intermittent	CD4			x	x
Instrumentation, Special	U14				x
Mirrors, Twin Remote Sport	D68				x
Power Antenna	U75				x
Radio, AM/FM Stereo	U58				x
Tie-Downs, Cargo Box	AV3				x
Windows, Power	A31				x

PLEASE REVIEW OPTION RESTRICTIONS BEFORE ORDERING

Q-S	OPTION	
496	C60	**AIR CONDITIONING**
		AXLES, REAR:
____	G92	——Performance Ratio *(See Power Teams Chart) (Reqs LG4 Eng and MX1 Trans)*
____	G80	——Limited Slip Differential *(N/A MM4 Trans)*
____	UA1	**BATTERY, HEAVY-DUTY**
		BUMPER EQUIPMENT: Front and Rear
497	V30	——Bumper Guards
497	VE5	——Bumper Rub Strips
497	U35	**CLOCK:** Electric *(Incl w/UF7 Gages or U14 Inst)*
496	D55	**CONSOLE:** *(Reqs Bucket Seats)*
498	V08	**COOLING, HEAVY-DUTY**
		COVER, CARGO BOX TONNEAU: *(N/A D73 Rails)*
____	19K	——Black
____	11K	——White
498	AU3	**DOOR LOCK SYSTEM, POWER**
496	B32	**FLOOR COVERING:** Mats, Color-Keyed Floor
498	UF7	**GAGE PACKAGE WITH TRIP ODOMETER:** *(N/A U14 Inst) (Incls U35 Clock)*
____	K81	**GENERATOR:** 63-Amp Delcotron *(N/A LD5 Eng)*
496	A01	**GLASS, TINTED:** All Windows
____	TT4	**HEADLAMPS, HALOGEN**
499	U14	**INSTRUMENTATION:** Special *(N/A UF7 Gages) (Incls U35 Clock)*
498	TR9	**LIGHTING, AUXILIARY**
		MIRRORS:
____	D33	——Outside Rearview, LH Remote Control
497	D35	——Sport, LH Remote and RH Manual
499	D68	——Sport, Twin Remote
497	B93	**MOLDINGS:** Door Edge Guard
____	B3W	**PRELIMINARY PRICE INFORMATION**
		RADIO EQUIPMENT:
496	U63	——AM Radio
498	U69	——AM/FM Radio
499	U58	——AM/FM Stereo Radio
____	UM2	——AM/FM Stereo Radio w/8-Track Stereo Tape
____	UN3	——AM/FM Stereo Radio w/Stereo Cassette Tape
____	UP6	——AM/FM Stereo/Citizens Band Radio w/Power Antenna *(N/A U75 Antenna)*
____	U76	——Windshield Antenna *(N/A UP6 Radio) (Incl with above Radio Equip w/o U75 Antenna)*
499	U75	——Power Antenna *(Reqs U63, U69, U58, UM2 or UN3 Radio) (N/A U76 Antenna or UP6 Radio)*
498	D73	**RAILS, CARGO BOX SIDE**
____	AG9	**SEAT, POWER:** Six-Way *(Driver's Side only) (Reqs 55/45 Seat)*
497	K35	**SPEED CONTROL WITH RESUME SPEED:** Automatic *(Reqs MX1 Trans)*
497	N33	**STEERING WHEEL:** Comfortilt
____	F41	**SUSPENSION, SPORT**
497	N23	**TANK, FUEL:** 22 Gallons
499	AV3	**TIE-DOWNS, CARGO BOX**
		TIRES: *(B/W: Blackwall, W/W: Whitewall, W/L: White Lettered)*
		Steel Belted Radial Ply
____	QXX	——P205/75 R-14 B/W *(Base)*
496	QXY	——P205/75 R-14 W/W
____	QXZ	——P205/75 R-14 W/L
		TRANSMISSION: *(See Power Teams Chart)*
____	MM3	——3-Speed Manual *(Reqs LC3 Eng)*
____	MM4	——4-Speed Manual *(Reqs LG4 Eng) (N/A G80 Axle or YF5 Calif)*
496	MX1	——Automatic
		WHEEL TRIM: *(Select Only One)*
____	PB2	——Wheel Covers, Sport *(Silver)*
____	55P	——Wheel Covers, Sport *(Gold) (N/A 16 Paint)*
____	N95	——Wheel Covers, Wire
496	ZJ7	——Wheels, Rally
____	N18	**WHEEL COVER LOCKING PACKAGE:** *(Reqs N95 Wheel Covers)*
499	A31	**WINDOWS:** Power
498	CD4	**WINDSHIELD WIPER SYSTEM:** Intermittent

COLOR AND TRIM SELECTION

PLEASE NOTE: The Exterior and Interior Combinations shown in the chart below are the only combinations that are available. **(D60 Non-Recommended Interior color combination not permitted)**

Interior Trim Color		Dk Blue	Camel	Maroon
MODEL	**SEAT TYPE**			
1AW80	Cloth Bench	CDD1	CCC1	CRR1
	Cloth Bucket	CDD2	CCC2	CRR2
	Cloth 55/45	CDD3	CCC3	CRR3
	Vinyl Bench	VDD1	VCC1	VRR1
	Vinyl Bucket	VDD2	VCC2	VRR2
	Vinyl 55/45	VDD3	VCC3	VRR3

WITHOUT Z16 ROYAL KNIGHT

Exterior Color	Color Code L	Color Code U	Lower Paint Accent Color and ordering code #		Decal Color Scheme*			
Black	19	19	Lt Blue (Met)	21M	Blue	R		
Black	19	19	Lt Maroon (Met)	72M	Red			R
Black	19	19	Silver (Met)	16M	Red			R
Blue, Dark (Met)	29	29	Lt Blue (Met)	21M	Blue	R		
Blue, Light (Met)	21	21	Dk Blue (Met)	29M	Blue	R		
Brown, Light (Met)	68	68	Med Brown (Met)	69M	Gold		R	
Brown, Medium (Met)	69	69	Black	19M	Gold		R	
Maroon, Light (Met)	72	72	Maroon (Met)	77M	Red			R
Maroon (Met)	77	77	Black	19M	Gold		R	
Maroon (Met)	77	77	Black	19M	Red			R
Silver (Met)	16	16	Black	19M	Red			R
Silver (Met)	16	16	Dk Blue (Met)	29M	Blue	R		
Silver (Met)	16	16	Maroon (Met)	77M	Red			R
White	11	11	Lt Brown (Met)	68M	Gold		R	
White	11	11	Lt Maroon (Met)	72M	Red			R

*Color determined by Exterior Color, Lower Accent Color and Interior Trim Combination. #Must be ordered.

WITH Z16 ROYAL KNIGHT

Exterior Color	Color Code L	Color Code U		Decal Color Scheme*			
Black	19	19		Gold		R	
Black	19	19		Red			R
Blue, Dark (Met)	29	29		Blue	R		
Blue, Light (Met)	21	21		Blue	R		
Brown, Light (Met)	68	68		Gold		R	
Brown, Medium (Met)	69	69		Gold		R	
Maroon, Light (Met)	72	72		Red			R
Maroon, Light (Met)	72	72		Gold		R	
Maroon (Met)	77	77		Gold		R	
Maroon (Met)	77	77		Red			R
Silver (Met)	16	16		Blue	R		
Silver (Met)	16	16		Red			R
White	11	11		Blue	R		
White	11	11		Gold		R	
White	11	11		Red			R

*Color determined by Exterior Color and Interior Trim Combination.

POWER TEAMS *(Refer to next page for option availability and application)*

ENGINE OPTION CONDITION		AXLE RATIO			
		2.41	2.56	2.73	3.08
WITH NA5 STANDARD EMISSIONS					
LC3	MM3 or MX1	—	—	Std	—
L39	MX1	—	Std	—	—
LG4	MM4	—	—	—	Std
	MX1	Std	—	G92	—
WITH YF5 CALIFORNIA EMISSIONS					
LD5	MX1	—	—	Std	—
LG4	MX1	Std	—	G92	—

EL CAMINO SUPER SPORT

REFER WEEKLY STOPS/LATEST UPDATE

MODEL

1AW80/Z15 El Camino Super Sport

_____Z15 Super Sport *(Incls LH Remote and RH Manual Sport Mirrors and Rally Wheels)*

EMISSION SYSTEMS: MUST ORDER ONE (See Power Teams)

_____**NA5 STANDARD EMISSION EQUIPMENT**

_____**YF5 CALIFORNIA EMISSION REQUIREMENTS**

ENGINES: MUST ORDER ONE

AVAILABLE WITH NA5 STANDARD EMISSION EQUIPMENT

_____LC3 3.8 Liter 2 BBL V6

_____L39 4.4 Liter 2 BBL V8 *(Reqs MX1 Trans)*

_____LG4 5.0 Liter 4 BBL V8

AVAILABLE WITH YF5 CALIFORNIA EMISSION REQUIREMENTS

_____LD5 3.8 Liter 2 BBL V6 *(Reqs MX1 Trans)*

_____LG4 5.0 Liter 4 BBL V8 *(Reqs MX1 Trans)*

QUICK-SPEC

IF TIRE AND/OR TRANSMISSION IN QUICK-SPEC IS NOT DESIRED YOU **MUST** "PLUS" ANOTHER TIRE AND/OR TRANSMISSION OPTION.		5 0 1 A	5 0 2 A	5 0 3 A	5 0 4 A
Super Sport	Z15	x	x	x	x
Air Conditioning	C60	x	x	x	x
Console (w/Bucket Seats)	D55	x	x	x	x
Glass, Tinted	A01	x	x	x	x
Mats, Color-Keyed Floor	B32	x	x	x	x
Radio, AM	U63	x	N/I	N/I	N/I
Steering Wheel, Comfortilt	N33	x	x	x	x
Tires, P205/75 R-14 White Lettered	QXZ	x	x	x	x
Transmission, Automatic	MX1	x	x	x	x
Bumper Guards	V30		x	x	x
Bumper Rub Strips	VE5		x	x	x
Gage Package with Trip Odometer	UF7		x	N/I	N/I
Moldings, Door Edge Guard	B93		x	x	x
Radio, AM/FM	U69		x	x	N/I
Cooling, Heavy-Duty	V08		x	x	x
Speed Control with Resume Speed	K35		x	x	x
Tank, Fuel	N23		x	x	x
Door Lock System, Power	AU3			x	x
Instrumentation, Special	U14			x	x
Lighting, Auxiliary	TR9			x	x
Rails, Cargo Box Side	D73			x	x
W/S Wiper System, Intermittent	CD4			x	x
Mirrors, Twin Remote Sport	D68				x
Power Antenna	U75				x
Radio, AM/FM Stereo	U58				x
Tie-Downs, Cargo Box	AV3				x
Windows, Power	A31				x

PLEASE REVIEW OPTION RESTRICTIONS BEFORE ORDERING

Q-S	OPTION	
501	C60	**AIR CONDITIONING**
		AXLES, REAR:
_____	G92	——Performance Ratio *(See Power Teams Chart) (Reqs LG4 Eng and MX1 Trans)*
_____	G80	——Limited Slip Differential *(N/A MM4 Trans)*
_____	UA1	**BATTERY, HEAVY-DUTY**
		BUMPER EQUIPMENT: Front and Rear
502	V30	——Bumper Guards
502	VE5	——Bumper Rub Strips
_____	U35	**CLOCK:** Electric *(Incl w/UF7 Gages or U14 Inst)*
501	D55	**CONSOLE:** *(Reqs Bucket Seats)*
502	V08	**COOLING, HEAVY-DUTY**
		COVER, CARGO BOX TONNEAU: *(N/A D73 Rails)*
_____	19K	——Black
_____	11K	——White
503	AU3	**DOOR LOCK SYSTEM, POWER**
501	B32	**FLOOR COVERING:** Mats, Color-Keyed Floor
502	UF7	**GAGE PACKAGE WITH TRIP ODOMETER:** *(N/A U14 Inst) (Incls U35 Clock)*
_____	K81	**GENERATOR:** 63-Amp Delcotron *(N/A LD5 Eng)*
501	A01	**GLASS, TINTED:** All Windows
_____	TT4	**HEADLAMPS, HALOGEN**
503	U14	**INSTRUMENTATION:** Special *(N/A UF7 Gages) (Incls U35 Clock)*
503	TR9	**LIGHTING, AUXILIARY**
504	D68	**MIRRORS:** Sport, Twin Remote
502	B93	**MOLDINGS:** Door Edge Guard
_____	B3W	**PRELIMINARY PRICE INFORMATION**
		RADIO EQUIPMENT:
501	U63	——AM Radio
502	U69	——AM/FM Radio
504	U58	——AM/FM Stereo Radio
_____	UM2	——AM/FM Stereo Radio w/8-Track Stereo Tape
_____	UN3	——AM/FM Stereo Radio w/Stereo Cassette Tape
_____	UP6	——AM/FM Stereo/Citizens Band Radio w/Power Antenna *(N/A U75 Antenna)*
_____	U76	——Windshield Antenna *(N/A UP6 Radio) (Incl with above Radio Equip w/o U75 Antenna)*
504	U75	——Power Antenna *(Reqs U63, U69, U58, UM2 or UN3 Radio) (N/A U76 Antenna)*
503	D73	**RAILS, CARGO BOX SIDE**
_____	Z16	**ROYAL KNIGHT:** *(See Color and Trim Chart)*
_____	AG9	**SEAT POWER:** Six-Way *(Driver's Side only) (Reqs 55/45 Seat)*
502	K35	**SPEED CONTROL WITH RESUME SPEED:** Automatic *(Reqs MX1 Trans)*
501	N33	**STEERING WHEEL:** Comfortilt
_____	F41	**SUSPENSION, SPORT**
502	N23	**TANK, FUEL:** 22 Gallons
504	AV3	**TIE-DOWNS, CARGO BOX**
		TIRES: *(B/W: Blackwall, W/W Whitewall, W/L: White Lettered)* Steel Belted Radial Ply
_____	QXX	——P205/75 R-14 B/W *(Base)*
_____	QXY	——P205/75 R-14 W/W
501	QXZ	——P205/75 R-14 W/L
		TRANSMISSIONS:
_____	MM3	——3-Speed Manual *(Reqs LC3 Eng)*
_____	MM4	——4-Speed Manual *(Reqs LG4 Eng) (N/A G80 Axle or YF5 Calif)*
501	MX1	——Automatic
		WHEEL TRIM:
_____	PB2	——Wheel Covers, Sport *(Silver)*
_____	55P	——Wheel Covers, Sport *(Gold) (N/A 16 or 21 Paint)*
504	A31	**WINDOWS:** Power
503	CD4	**WINDSHIELD WIPER SYSTEM:** Intermittent

✓ COLOR AND TRIM SELECTION

PLEASE NOTE: The Exterior and Interior Combinations shown in the chart below and designated as recommended (R), represent the ideal combinations. Those that are shown as acceptable (A), are attractive, but less desirable than the recommended combinations. Orders for additional combinations may be submitted, provided the dealer orders (D60), as verification that the requested combination is definitely desired.

Interior Trim Color		Dk Blue	Camel	Champagne	Maroon
MODEL	**SEAT TYPE**				
1AW80	Cloth Bench	CDD1	CCC1		CRR1
	Cloth Bucket	CDD2	CCC2		CRR2
	Cloth 55/45	CDD3	CCC3		CRR3
	Vinyl Bench	VDD1	VCC1	VHH1	VRR1
	Vinyl Bucket	VDD2	VCC2	VHH2	VRR2
	Vinyl 55/45	VDD3	VCC3	VHH3	VRR3

EXTERIOR PAINT COLOR	COLOR CODE L	COLOR CODE U				
Beige	63	63	R	R		R
Black	19	19		R	R	R
Blue, Dark (Met)	29	29	R	R		
Blue, Light (Met)	21	21	R			
Brown, Light (Met)	68	68		A		
Brown, Medium (Met)	69	69		A		
Champagne (Met)	36	36			R	
Cream	35	35			R	
Green, Jade (Met)	47	47		A		
Green, Light Jade (Met)	45	45		A		
Maroon, Light (Met)	72	72				R
Maroon (Met)	77	77				R
Silver (Met)	16	16	R			R
White	11	11	R	R	R	R

L = Lower U = Upper

POWER TEAMS

(Refer to next page for option availability and application)

ENGINE OPTION CONDITION		AXLE RATIO 2.41	2.56	2.73	3.08
WITH NA5 STANDARD EMISSIONS					
LC3	MM3 or MX1	—	—	Std	—
L39	MX1	—	Std	—	—
LG4	MM4	—	—	—	Std
	MX1	Std	—	G92	—
WITH YF5 CALIFORNIA EMISSIONS					
LD5	MX1	—	—	Std	—
LG4	MX1	Std	—	G92	—

EL CAMINO

REFER WEEKLY STOPS/LATEST UPDATE

MODEL
1AW80 El Camino

EMISSION SYSTEMS: MUST ORDER ONE (See Power Teams)

_____**NA5 STANDARD EMISSION EQUIPMENT**

_____**YF5 CALIFORNIA EMISSION REQUIREMENTS**

ENGINES: MUST ORDER ONE

AVAILABLE WITH NA5 STANDARD EMISSION EQUIPMENT
_____LC3 3.8 Liter 2 BBL V6
_____L39 4.4 Liter 2 BBL V8 *(Reqs MX1 Trans)*
_____LG4 5.0 Liter 4 BBL V8

AVAILABLE WITH YF5 CALIFORNIA EMISSION REQUIREMENTS
_____LD5 3.8 Liter 2 BBL V6 *(Reqs MX1 Trans)*
_____LG4 5.0 Liter 4 BBL V8 *(Reqs MX1 Trans)*

QUICK-SPEC

IF TIRE AND/OR TRANSMISSION IN QUICK-SPEC IS NOT DESIRED YOU **MUST** "PLUS" ANOTHER TIRE AND/OR TRANSMISSION OPTION.		4 9 1 A	4 9 2 A	4 9 3 A	4 9 4 A
Air Conditioning	C60	x	x	x	x
Console (w/Bucket Seats Only)	D55	x	x	x	x
Glass, Tinted	A01	x	x	x	x
Mats, Color-Keyed Floor	B32	x	x	x	x
Radio, AM	U63	x	x	N/I	N/I
Tires, P205/75 R-14 Whitewall	QXY	x	x	x	x
Transmission, Automatic	MX1	x	x	x	x
Wheels, Rally	ZJ7	x	x	x	x
Bumper Guards	V30		x	x	x
Bumper Rub Strips	VE5		x	x	x
Clock, Electric	U35		x	N/I	N/I
Mirrors, LH Remote and RH Manual Sport	D35		x	x	x
Moldings, Body Side Deluxe	BW2		x	x	x
Moldings, Door Edge Guard	B93		x	x	x
Speed Control with Resume Speed	K35		x	x	x
Steering Wheel, Comfortilt	N33		x	x	x
Tank, Fuel	N23		x	x	x
Door Lock System, Power	AU3			x	x
Gage Package with Trip Odometer	UF7			x	N/I
Lighting, Auxiliary	TR9			x	x
Cooling, Heavy-Duty	V08			x	x
Radio, AM/FM	U69			x	N/I
Rails, Cargo Box Side	D73			x	x
W/S Wiper System, Intermittent	CD4			x	x
Instrumentation, Special	U14				x
Power Antenna	U75				x
Radio, AM/FM Stereo	U58				x
Tie-Downs, Cargo Box	AV3				x
Windows, Power	A31				x

PLEASE REVIEW OPTION RESTRICTIONS BEFORE ORDERING

Q-S	OPTION	
491	C60	**AIR CONDITIONING**
		AXLES, REAR:
____	G92	——Performance Ratio *(See Power Teams Chart) (Reqs LG4 Eng and MX1 Trans)*
____	G80	——Limited Slip Differential *(N/A MM4 Trans)*
____	UA1	**BATTERY, HEAVY-DUTY**

PLEASE REVIEW OPTION RESTRICTIONS BEFORE ORDERING

Q-S	OPTION	
		BUMPER EQUIPMENT: Front and Rear
492	V30	——Bumper Guards
492	VE5	——Bumper Rub Strips
492	U35	**CLOCK:** Electric *(Incl w/UF7 Gages or U14 Inst)*
491	D55	**CONSOLE:** *(Reqs Bucket Seats)*
493	V08	**COOLING, HEAVY-DUTY**
		COVER, CARGO BOX TONNEAU: *(N/A D73 Rails)*
____	19K	——Black
____	11K	——White
493	AU3	**DOOR LOCK SYSTEM, POWER**
491	B32	**FLOOR COVERING:** Mats, Color-Keyed Floor
493	UF7	**GAGE PACKAGE WITH TRIP ODOMETER:** *(N/A U14 Inst) (Incls U35 Clock)*
____	K81	**GENERATOR:** 63-Amp Delcotron *(N/A LD5 Eng)*
491	A01	**GLASS, TINTED:** All Windows
____	TT4	**HEADLAMPS, HALOGEN**
494	U14	**INSTRUMENTATION:** Special *(N/A UF7 Gages) (Incls U35 Clock)*
493	TR9	**LIGHTING, AUXILIARY**
		MIRRORS:
____	D33	——Outside Rearview, LH Remote Control
492	D35	——Sport, LH Remote and RH Manual
____	D68	——Sport, Twin Remote
		MOLDINGS:
492	BW2	——Body Side, Deluxe *(See Page 8 for Color Application)*
492	B93	——Door Edge Guard
____	BX8	——Front Fender, Body Side and Tailgate *(N/A BW2 Mldgs)*
____	B3W	**PRELIMINARY PRICE INFORMATION**
		RADIO EQUIPMENT:
491	U63	——AM Radio
493	U69	——AM/FM Radio
494	U58	——AM/FM Stereo Radio
____	UM2	——AM/FM Stereo Radio w/8-Track Stereo Tape
____	UN3	——AM/FM Stereo Radio w/Stereo Cassette Tape
____	UP6	——AM/FM Stereo/Citizens Band Radio w/Power Antenna *(N/A U75 Antenna)*
____	U76	——Windshield Antenna *(N/A UP6 Radio) (Incl with above Radio Equip w/o U75 Antenna)*
494	U75	——Power Antenna *(Reqs U63, U69, U58, UM2 or UN3 Radio) (N/A U76 Antenna)*
493	D73	**RAILS, CARGO BOX SIDE**
____	AG9	**SEAT, POWER:** Six-Way *(Driver's Side only) (Reqs 55/45 Seat)*
492	K35	**SPEED CONTROL WITH RESUME SPEED:** Automatic *(Reqs MX1 Trans)*
492	N33	**STEERING WHEEL:** Comfortilt
____	F41	**SUSPENSION, SPORT**
492	N23	**TANK, FUEL:** 22 Gallons
494	AV3	**TIE-DOWNS, CARGO BOX**
		TIRES: *(B/W: Blackwall, W/W: Whitewall, W/L: White Lettered)*
		Steel Belted Radial Ply
____	QXX	——P205/75 R-14 B/W *(Base)*
491	QXY	——P205/75 R-14 W/W
____	QXZ	——P205/75 R-14 W/L
		TRANSMISSIONS: *(See Power Teams Chart)*
____	MM3	——3-Speed Manual *(Reqs LC3 Eng)*
____	MM4	——4-Speed Manual *(Reqs LG4 Eng) (N/A G80 Axle or YF5 Calif)*
491	MX1	——Automatic
		WHEEL TRIM: *(Select Only One)*
____	PB2	——Wheel Covers, Sport *(Silver)*
____	55P	——Wheel Covers, Sport *(Gold) (N/A 16 or 21 Paint)*
____	N95	——Wheel Covers, Wire
491	ZJ7	——Wheels, Rally
____	N18	**WHEEL COVER LOCKING PACKAGE:** *(Reqs N95 Wheel Covers)*
494	A31	**WINDOWS:** Power
493	CD4	**WINDSHIELD WIPER SYSTEM:** Intermittent

✓ BODY SIDE MOLDING CHART

MOLDING COLOR ONLY WHEN BW2 MOLDING IS ORDERED
N/A Z15 SUPER SPORT OR D91 CONQUISTA

EXTERIOR PAINT COLOR	INTERIOR TRIM COLOR: DK BLUE	CAMEL	CHAMPAGNE	MAROON
BEIGE 63	R	R		R
Molding	BEIGE	BEIGE	BEIGE	BEIGE
BLACK 19		R	R	R
Molding	BLACK	BLACK	BLACK	BLACK
BLUE, DARK (MET) 29	R	R		
Molding	DK BLUE (MET)	DK BLUE (MET)	DK BLUE (MET)	DK BLUE (MET)
BLUE, LIGHT (MET) 21	R			
Molding	DK BLUE (MET)	DK BLUE (MET)	DK BLUE (MET)	DK BLUE (MET)
BROWN, LIGHT (MET) 68		A		
Molding	BEIGE	BEIGE	BEIGE	BEIGE
BROWN, MED (MET) 69		A		
Molding	BEIGE	BEIGE	BEIGE	BEIGE
CHAMPAGNE (MET) 36			R	
Molding	WHITE	WHITE	WHITE	WHITE
CREAM 35			R	
Molding	WHITE	WHITE	WHITE	WHITE
GREEN, JADE (MET) 47		A		
Molding	LT JADE GRN(MET)	LT JADE GRN(MET)	LT JADE GRN(MET)	LT JADE GRN(MET)
GREEN, LIGHT JADE (MET) 45		A		
Molding	LT JADE GRN (MET)	LT JADE GRN (MET)	LT JADE GRN (MET)	LT JADE GRN (MET)
MAROON, LIGHT (MET) 72				R
Molding	LT MAROON (MET)	LT MAROON (MET)	LT MAROON (MET)	LT MAROON (MET)
MAROON (MET) 77				R
Molding	LT MAROON (MET)	LT MAROON (MET)	LT MAROON (MET)	LT MAROON (MET)
SILVER (MET) 16	R			R
Molding	WHITE	WHITE	WHITE	WHITE
WHITE 11	R	R	R	R
Molding	WHITE	WHITE	WHITE	WHITE

R = Recommended Combinations
A = Acceptable Combinations
SHADED AREA = Non-Recommended Combination
(Reqs. D60 Non-Recommended Color Combination Option)

EL CAMINO

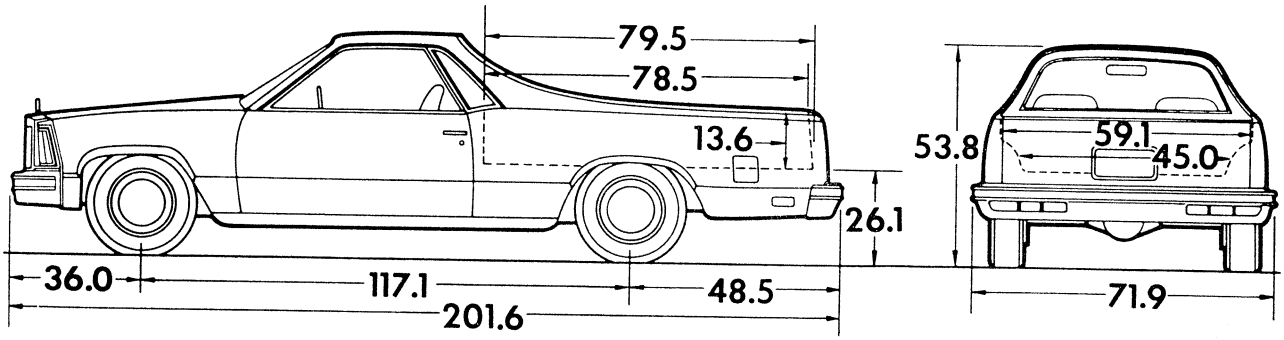

Model	Engine No. Cyl.	Curb Weight (lb)			Model Weight (lb)*			Ground Clearance (in.)★	
		Front	Rear	Total	Front	Rear	Total	Front	Rear
1AW80	6	1848	1418	3266	2077	1639	3716	7.3	6.9
1AW80 With Z15	6	1855	1424	3279	2084	1645	3729		

★Dimensions with standard equipment, unloaded.

*Model Weight includes Curb Weight plus occupants (standard seating capacity x 150 lb). Total Model Weight may vary as much as ± 50 lbs. to allow for production build variation.

GVWR SELECTOR

*Engine	*GVW Range (lb)	†GAWR (lb)		Minimum Equipment Required for GVW Range		
		*Front	*Rear	Tires, Front	Tires, Rear	*Chassis Equipment
6	**4516 to 5003**	2034 to 2356	2482 to 2647	P205/75R-14	P205/75R-14	Standard

†GAWR—Gross Axle Weight Rating.

*The higher ranges shown for GVWR and GAWR, front and rear, reflect capacities of springs which will be installed based on the computed weight of the vehicle with optional equipment as ordered.

EL CAMINO

POWER TEAMS

ENGINE	TRANSMISSION	REAR AXLE	
Type and Code	Type and Code	Capacity (lb)	Ratio and Code

ALL STATES EXCEPT CALIFORNIA

			2.41	2.56	2.73	3.08
3.8 Liter 229 2-bbl V6-LC3 (Standard Engine)	3-Speed Manual (Std)—MM3	2750◆	—	—	X (Std)	—
	Automatic—MX1		—	—	X (Std)	—
4.4 Liter 267 2-bbl V8-L39	Automatic—MX1		—	X (Std)	—	—
5.0 Liter 305 4-bbl V8-LG4	• 4-Speed Manual—MM4		—	—	—	X (Std)
	Automatic—MX1		X (Std)	—	G92	—

◆Limited Slip Differential rear axle available for all axle ratios.
• Limited Slip Differential rear axle not available.

CALIFORNIA ONLY

			2.41	2.73
3.8 Liter †231 2-bbl V6-LD5	Automatic—MX1	2750◆	—	X (Std)
5.0 Liter †305 4-bbl V8-LG4	Automatic—MX1		X (Std)	G92

†Optional V6 or V8 engine required for registration in the State of California.
◆Limited Slip Differential rear axle available for all axle ratios.

ENGINE RATINGS

ALL STATES EXCEPT CALIFORNIA

SAE Net Ratings	3.8 Liter 229 2-bbl V6★	4.4 Liter 267 2-bbl V8★	5.0 Liter 305 4-bbl V8★
Net Horsepower	110 @ 4200 rpm	115 @ 4000 rpm	145 @ 3800 rpm
Net Torque, lb-ft	170 @ 2000 rpm	200 @ 2400 rpm	240 @ 2400 rpm

★Light Duty Emissions

CALIFORNIA ONLY

SAE Net Ratings	3.8 Liter 231 2-bbl V6★	5.0 Liter 305 4-bbl V8★
Net Horsepower	110 @ 3800 rpm	145 @ 3800 rpm
Net Torque, lb-ft	190 @ 1600 rpm	240 @ 2400 rpm

★Light Duty Emissions

EL CAMINO

1981 VEHICLES WITH STANDARD EQUIPMENT

Prices shown are effective with vehicles produced on and after January 5, 1981

Description	Model Number	Wheel Base	Factory D&H(a)	List Price	Mfr's Sgt'd Retail Price★	Group Number
◆ **3.8 Liter 2 BBL V6 Engine-Engine Ordering Code LC3**						
El Camino-						
3-Passenger	1AW80	117.1"	12.40		6988.40	12
Super Sport-						
3-Passenger	1AW80/Z15	117.1"	12.40		7217.40	12

★ Manufacturer's Suggested Retail Prices do not include applicable destination charges, state and local taxes, license fees, optional equipment or accessories or special items or services.

◆ Refer to Power Team Chart for California Emission Certification Requirements.

OPTIONS AND ACCESSORIES WHEN INSTALLED BY CHEVROLET

Prices shown are effective with vehicles produced on and after January 5, 1981

Description	Added Weight (F	R)	Option Number	Factory D&H(a)	List Price	Mfr's Suggested Retail Price◇
POWER TEAMS						
(See Power Teams Chart for availability and specifications)						
Engines:						
3.8 Liter 2 BBL V6. Available only when YF5 California Emission and MX1 Automatic Transmission are specified	8	-5	LD5	*NO ADDITIONAL CHARGE*		
4.4 Liter 2 BBL V8. Available only when NA5 Standard Emission is specified. Not available when MM4 Transmission is specified.	10	5	L39	N.A.		50.00
5.0 Liter 4 BBL V8. Available only when NA5 Standard Emission and MM4 or MX1 Transmission or YF5 California Emission and MX1 Automatic Transmission are specified	158	22	LG4	N.A.		50.00
Transmissions:						
Automatic						
With LD5 3.8 Liter V6 engine	-4	-2	MX1	N.A.		349.00
With LC3 3.8 Liter V6 engine	-1	4	MX1	N.A.		349.00
With V8 Engine	36	12	MX1	N.A.		349.00
4-Speed Manual. Available only when LG4 5.0 Liter 4 BBL V8 Engine is specified. Not available when YF5 California Emission is specified	2	1	MM4	N.A.		141.00
Axles, Rear: *(See Power Team Chart for availability)*						
Performance Ratio. Available only when LG4 5.0 Liter Engine and MX1 Automatic Transmission are specified	0	0	G92	N.A.		19.00
Limited Slip Differential. Not available when MM4 Transmission is specified	0	0	G80	N.A.		67.00
OTHER OPTIONS						
Air Conditioning: Includes increased cooling.						
Without LC3 3.8 Liter V6 engine	51	4	C60	N.A.		585.00
With LC3 3.8 Liter V6 engine	63	5	C60	N.A.		585.00
Battery: *Heavy-Duty*	7	-1	UA1	N.A.		20.00
Bumper Equipment:						
Bumper Rub Strips. Front and Rear. Includes black resilient impact strips	2	2	VE5	N.A.		43.00
Guards, Bumper. Front and Rear	2	2	V30	N.A.		48.00
Clock, Electric. Included when UF7 Gage Package or U14 Instrumentation is specified	0	0	U35	N.A.		23.00
Conquista: Not available when Z15 Super Sport is specified. Includes BX8 Front Fender, body side and tailgate moldings. *See Conquista Interior and Exterior Color Selection Chart for interior and exterior color availability and ordering information*	0	0	D91	N.A.		161.00
Console: Available only when bucket seats are specified. Shift lever is mounted on console.						
Without MX1 Transmission	5	1	D55	N.A.		86.00
With MX1 Transmission	10	5	D55	N.A.		86.00
Cooling, Heavy-Duty:						
Without C60 Air Conditioning	6	1	V08	N.A.		61.00
With C60 Air Conditioning	4	-1	V08	N.A.		34.00

(a) D & H Charges on vehicle and optional equipment include reimbursement to Chevrolet Motor Division for any tax that it has paid, incurred or agreed to pay thereon.

◇ State and local taxes not included.

EL CAMINO

OPTIONS AND ACCESSORIES WHEN INSTALLED BY CHEVROLET

Prices shown are effective with vehicles produced on and after January 5, 1981

Description	Added Weight (F	R)	Option Number	Factory D&H(a)	List Price	Mfr's Suggested Retail Price◇
OTHER OPTIONS						
Cover, Cargo Box Tonneau: Not available when D73 Cargo Rails are specified.						
Black	0	8	19K	N.A.		113.00
White	0	8	11K	N.A.		113.00
Door Lock System, Power: Electric	1	0	AU3	N.A.		93.00
Emission Systems: *Dealer Note* – One of the following emission options must be specified.						
California Emission Requirements. Includes all testing, equipment and /or certification necessary for registration in the State of California. *(See Power Teams Chart for availability and specifications)*	13	0	YF5	N.A.		46.00
Standard Emission Equipment	0	0	NA5	*NO ADDITIONAL CHARGE*		
Floor Covering: *Mats, Color-Keyed Floor.* Two front	4	2	B32	N.A.		13.00
Gage Package With Trip Odometer: Includes voltmeter, temperature and oil pressure gages and U35 Electric Clock mounted on instrument panel. Not available when U14 Instrumentation is specified	1	0	UF7	N.A.		92.00
Generator, 63-Amp Delcotron: Not available when LD5 3.8 Liter 2 BBL V6 Engine is specified.						
Without C60 Air Conditioning	1	0	K81	N.A.		34.00
With C60 Air Conditioning	1	0	K81	N.A.		6.00
Glass: *Tinted.* All windows	0	0	A01	N.A.		75.00
Headlamps, Halogen	1	0	TT4	N.A.		36.00
Instrumentation: *Special.* Includes tachometer and voltmeter, temperature and oil pressure gages, U35 Electric Clock and Trip Odometer. Not available when UF7 Gage Package is specified	2	0	U14	N.A.		159.00
Lighting, Auxiliary: Includes headlamp warning buzzer, courtesy and underhood lights	1	0	TR9	N.A.		26.00
Mirrors:						
Outside Rearview, LH Remote. Not available when Z15 Super Sport is specified	1	0	D33	N.A.		19.00
Sport, LH Remote and RH Manual. Included when Z15 Super Sport is specified	2	2	D35	N.A.		47.00
port, Twin Remote						
Without Z15 Super Sport	2	1	D68	N.A.		73.00
With Z15 Super Sport	2	1	D68	N.A.		26.00
Moldings:						
Body Side, Deluxe. Not available when Z15 Super Sport or D91 Conquista is specified	0	1	BW2	N.A.		53.00
Door Edge Guard	0	0	B93	N.A.		13.00
Front Fender, Body Side and Tailgate. Not available when Z15 Super Sport or BW2 Deluxe Body Side Moldings is specified. Included when D91 Conquista is specified	1	2	BX8	N.A.		49.00
Paints, Exterior: *Solid See Interior and Exterior Color Selection Chart for ordering information*	0	0	...	*NO ADDITIONAL CHARGE*		
Radio Equipment:						
AM Radio	5	2	U63	N.A.		90.00
AM /FM Radio	6	2	U69	N.A.		142.00
AM /FM Stereo Radio	11	4	U58	N.A.		178.00
AM /FM Stereo Radio with 8 Track Stereo Tape	13	4	UM2	N.A.		252.00
AM /FM Stereo Radio with Stereo Cassette Tape	13	4	UN3	N.A.		264.00
AM /FM Stereo /Citizens Band Radio with Power Antenna	5	2	UP6	N.A.		487.00
Windshield Antenna. Included when U63, U69, U58, UM2 or UN3 Radio is specified without U75 Power Antenna. Not available when UP6 Radio is specified	0	0	U76	N.A.		25.00
Power Antenna. Available only when U 69, U58, UM2 or UN3 Radio is specified. Not available w U76 Antenna, or UP6 Radio is specified	4	0	U75	N.A.		47.00
Rails, Cargo Box Side	0	6	D73	N.A.		77.00

(a) D & H Charges on vehicle and optional equipment include reimbursement to Chevrolet Motor Division for any tax that it has paid, incurred or agreed to pay thereon.

◇ State and local taxes not included.

Published: FEBRUARY 2, 1981

EL CAMINO

OPTIONS AND ACCESSORIES WHEN INSTALLED BY CHEVROLET

Prices shown are effective with vehicles produced on and after January 5, 1981

Description	Added Weight (F	R)	Option Number	Factory D&H(a)	List Price	Mfr's Suggested Retail Price◇
OTHER OPTIONS						
Royal Knight: Not available when D91 Conquista, BW2 or BX8 Moldings, or N95 Wheel Covers are specified. *See Interior and Exterior Color Selection Chart*	0	0	Z16	N.A.		71.00
Seat, Power: *Six Way.* Driver's side only Available only with 55 /45 Seat Trim	10	8	AG9	N.A.		173.00
Seat Trim: *See Interior and Exterior Color Selection Chart for availability and ordering information.*						
*C**1 Cloth Bench*	0	0	...	*NO ADDITIONAL CHARGE*		
*C**2 Cloth Buckets*	0	0	...	N.A.		91.00
*C**3 Cloth 55 /45*	0	0	...	N.A.		181.00
*V**1 Vinyl Bench*	0	0	...	N.A.		28.00
*V**2 Vinyl Buckets*	0	0	...	N.A.		91.00
*V**3 Vinyl 55 /45*	0	0	...	N.A.		209.00
Speed Control: *Automatic with resume speed.* Available only when MX1 Automatic Transmission is specified	5	0	K35	N.A.		132.00
Steering Wheel: *Comfortilt*	2	0	N33	N.A.		81.00
Suspension *Sport*	0	8	F41	N.A.		13.00
Tank, Fuel: *22 gallons*	-1	6	N23	N.A.		22.00
Tie-Downs, Cargo Box	0	1	AV3	N.A.		20.00
Wheel Trim:						
Wheel Covers, Sport–Silver. Not available when ZJ7 Rally Wheels are specified						
Without Z15 Super Sport	2	2	PB2	N.A.		55.00
With Z15 Super Sport	2	2	PB2	N.A.		6.00
Wheel Covers, Sport–Gold. Not available when 16 or 21 Paint Codes or when ZJ7 Rally Wheels are specified.						
Without Z15 Super Sport	2	2	55P	N.A.		55.00
With Z15 Super Sport	2	2	55P	N.A.		6.00
Wheel Covers, Wire. Not available when ZJ7 Rally Wheels are specified	11	11	N95	N.A.		135.00
Wheels, Rally. Included when Z15 Super Sport is specified. Includes styled wheels, special hub caps and trim rings	4	5	ZJ7	N.A.		49.00
Wheel Cover Locking Package: Available only when N95 Wire Wheel Covers is specified	0	0	N18	N.A.		34.00
Windows, Power: Electric	5	3	A31	N.A.		140.00
Windshield Wiper System: *Intermittent*	0	0	CD4	N.A.		41.00

FACTORY INSTALLED REGULAR PRODUCTION TIRES

P205 /75R-14 Blackwall. Steel Belted Radial Ply (Standard)	0	0	QXX	*NO ADDITIONAL CHARGE*		
P205 /75R-14 Whitewall. Steel Belted Radial Ply	0	0	QXY	N.C.		67.00
P205 /75R-14 White Lettered. Steel Belted Radial Ply	0	0	QXZ	N.C.		86.00

(a) D & H Charges on vehicle and optional equipment include reimbursement to Chevrolet Motor Division for any tax that it has paid, incurred or agreed to pay thereon.

◇ State and local taxes not included.

NOTES

EL CAMINO

CAB & BODY FEATURES
COLOR & TRIM CHARTS
TWO-TONES

EL CAMINO

STANDARD EL CAMINO MODEL

The Standard model includes the following items as standard equipment.

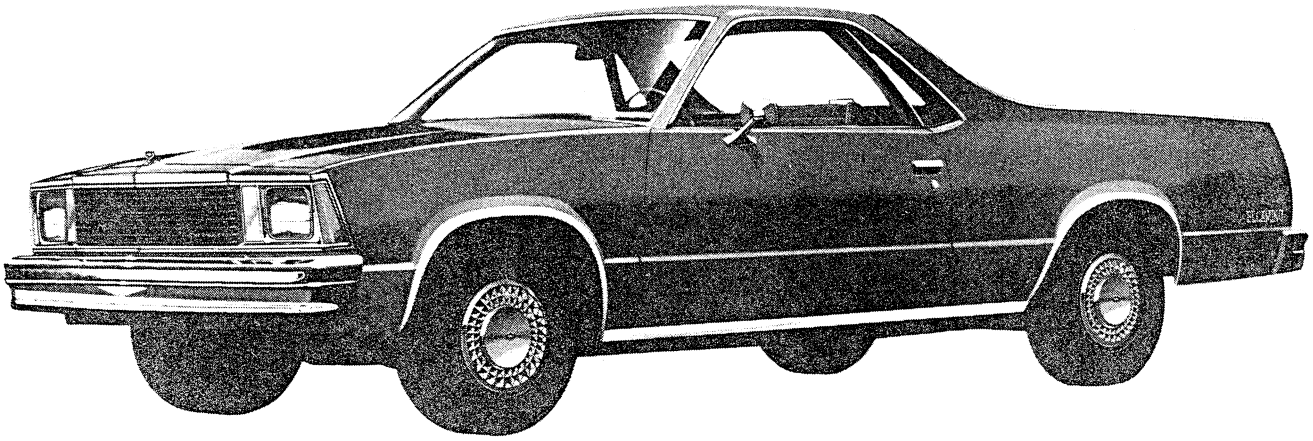

EXTERIOR

- **Bright Appearance Items:**
  "CHEVROLET" letters in lower LH corner of grille
  Chevrolet Bow Tie emblem: On center of grille header panel, at upper center of tailgate and in center of wheel covers
  "El Camino" nameplates: Sides of rear fenders
  Chrome front and rear bumpers
  Door lock cylinders
  Door lock handles
  Grille and moldings
  Headlight bezels
  Headlamp, parking lamp and marker lamp moldings
  Hood ornament; upright mounted, on front end panel
  LH side rearview mirror
  License pocket moldings
  Pickup box, rear sail panel and rear roof moldings
  Quarter window moldings
  Rear marker lamp moldings
  Rocker panel moldings
  Roof drip moldings
  Side door belt bead moldings
  Wheel covers
  Wheel opening moldings
  Windshield and back window reveal moldings
- **Color:** See Interior and Exterior Color Selection Chart
- **Door Opening and Locking Methods:**
  Side doors; lift bar latch release with key lock cylinder
  Tailgate; single pivot handle on inside surface of tailgate, double latch
- **Doors:** RH and LH side doors and tailgate
- **Glass:** Windshield, drop glass in each side door. Side quarter windows, and back glass
- **Grille:** Plastic construction; chrome plated
- **Horn:** Dual note
- **Lights:**
  Combination parking/direction. Two front; single lens
  Combination tail/stop/direction and backup, mounted in bumper
  Headlights. Two; single rectangular, with integral side marker and reflectors
  License plate. Single rear
  Side marker and reflectors. 2 rear, quarter panel mounted
- **Mirror:** LH chrome fixed arm with rectangular head
- **Side Door Beams:** Steel beam running full width inside each side door
- **Tools:** Mechanical jack; wheel wrench
- **Wheels:** 14" x 6"; 5 bolt, 4¾" bolt circle
- **Windshield Wipers and Washers:** Electric; 2-speed wipers Hide-A-Way blades and arms

EL CAMINO

STANDARD EL CAMINO MODEL

The Standard model includes the following items as standard equipment.

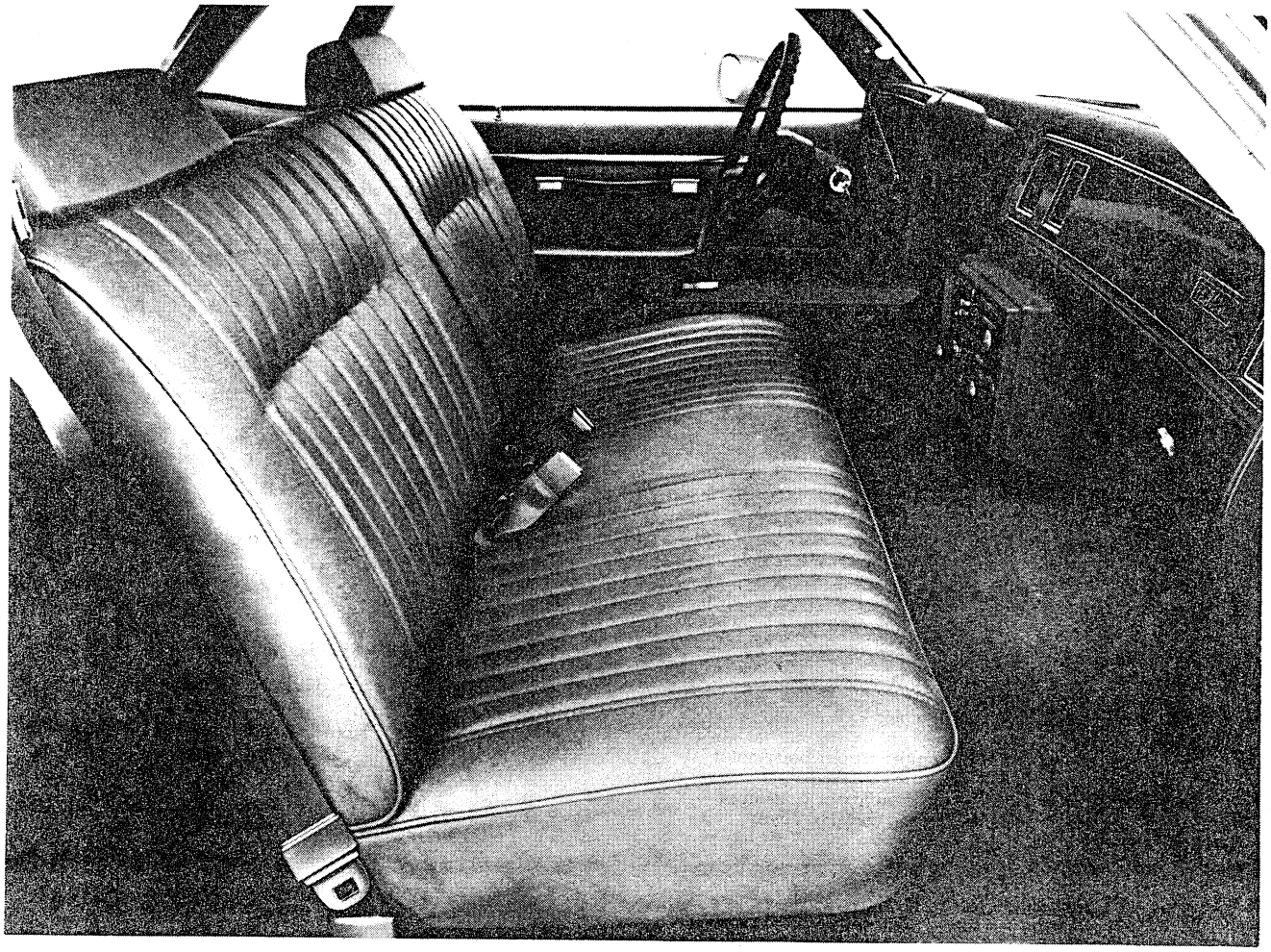

INTERIOR

- **Air Vents:** RH and LH cowl side; individually controlled
- **Armrests:** RH and LH full padding
- **Ashtray:** Lighted
- **Audible Warning:** Ignition key removal warning; activated by opening side door with key in switch; driver's seat belt unattached warning
- **Carpeting:** Color-keyed nylon cut pile
- **Cigarette Lighter**
- **Colors, Interior:**
  See Interior Color Selection Charts
- **Courtesy Light Switches:** Door-actuated
- **Door Locks:** Inside; bright pushbutton lock/release
- **Door Seals:** Closed-cell-type rubber
- **Flow-through ventilation system**
- **Glove Compartment:** Lighted
- **Headliner:** Cloth over foam padding
- **Heater and Defroster:** Deluxe-air
- **Instruments:**
  Gages: Speedometer; odometer and fuel
  Switches: Exterior lights, instrument lights, dome light, wiper-washer, headlight beam (column operated), ignition, directional signal with lane change position, hazard warning and heater. Pictured symbols for heater/AC fan, defroster, hazard warning control, wiper/washer, light switch and rear window defogger
  Warning Lights: Generator, oil pressure, engine temperature, brake warning, seat belt, direction signals and high beam
- **Instrument Panel:** Fiberglass filled plastic; energy absorbing with black rectangular applique and nameplate
- **Instrument Panel Knobs:** Black; aluminum faced
- **Insulation and Sound Deadening:** Dash (firewall), under floor mat and other strategic points
- **Interior Lights:** Instrument and dome operated by main light switch
- **Mirror, Rearview:** Inside, 10" wide, day-night type
- **Scuff Plates:** Side door opening protection and floor mat retainer
- **Seat:** Full width, choice of 1) cloth or 2) textured all-vinyl trim (at extra cost)
- **Seat and Shoulder Belts:** 3 sets of seat belts; 2 shoulder belts in outboard positions; includes warning light and audible warning for driver's seating position
- **Spare Tire and Carrier:** Stored horizontally behind seat on passenger side
- **Steering Lock:** Column-mounted combination ignition switch, transmission lock, steering lock and accessory switch
- **Steering Wheel:** Color-keyed grained plastic; soft rim with insert. "Chevrolet" bow tie on shroud; energy absorbing, locking column
- **Sunshades:** RH and LH padded; cloth covered
- **Trim Panels:** Cloth/vinyl door trim panels with pull straps and bright trim, vinyl-coated cowl side panels and cloth/foam padded headliner.
- **Window Regulator Knobs:** Clear plastic
- **Windshield Pillar Moldings:** Color-keyed

EL CAMINO

EL CAMINO SUPER SPORT MODEL

The Super Sport model includes all items listed for the Standard model plus the following additions or substitutions.

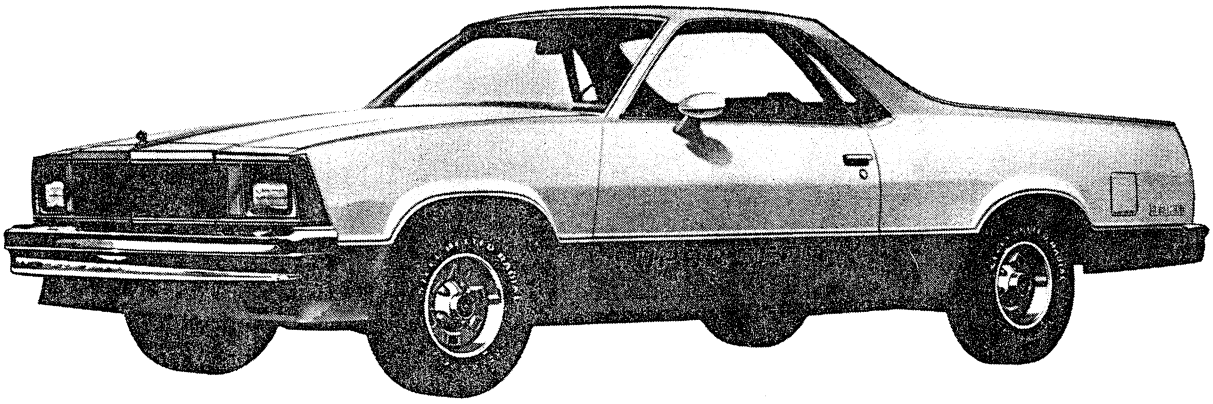

EXTERIOR

- **Bright Appearance Items:** Delete wheel opening and rocker panel moldings
- **Front Air Dam:** Painted lower body color
- **Mirrors:** Sport type. LH and RH, painted upper body color
- **Ornamentation:** "Super Sport" decals on lower portion of doors and on tailgate. Vinyl pinstriping decal to cover paint break lines
- **Quarter Window Moldings:** Black
- **Paint:** Accent paint color on lower body
- **Rally Wheels:** Painted to match lower body color

INTERIOR

- **Ornamentation:** "Super Sport" nameplate on instrument panel above glove compartment door

EL CAMINO SUPER SPORT MODEL WITH ROYAL KNIGHT OPTION—RPO Z16

This option includes all items listed for the Super Sport model plus the following additions or substitutions.

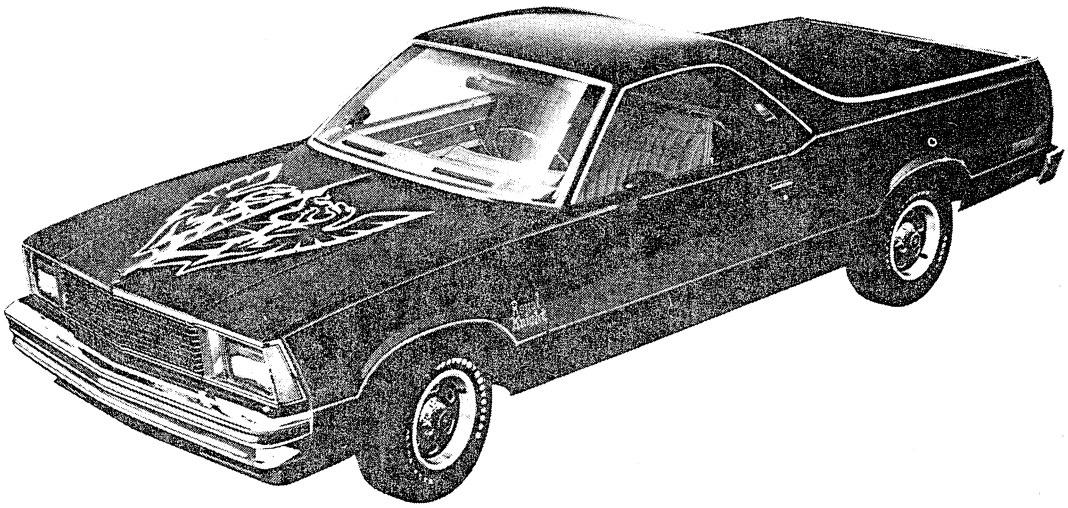

EXTERIOR

- **Special side striping on front fenders, bodysides, tailgate and sides of pickup box color-keyed to exterior color choice.**
- **Single-tone exterior color**
- **Large, bold hood decal**
- **"Royal Knight" decal on front fenders and tailgate**

EL CAMINO

EL CAMINO WITH CONQUISTA OPTION—RPO D91

This option includes all items listed for the standard model plus the following additions or substitutions.

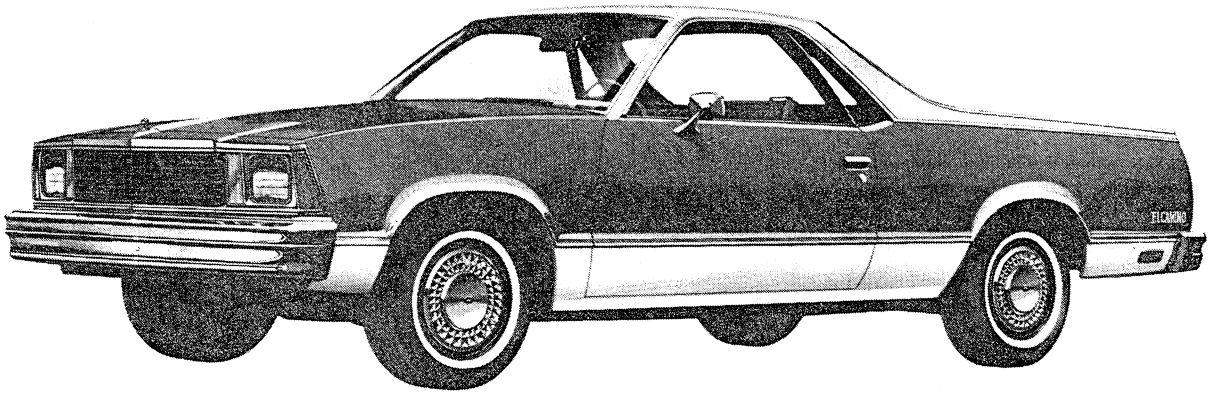

EXTERIOR

- **Bright paint break moldings on front fenders, bodysides, tailgate and sides of pickup box**
- **"Conquista" decal on RH upper portion of tailgate**
- **Special two-tone paint**

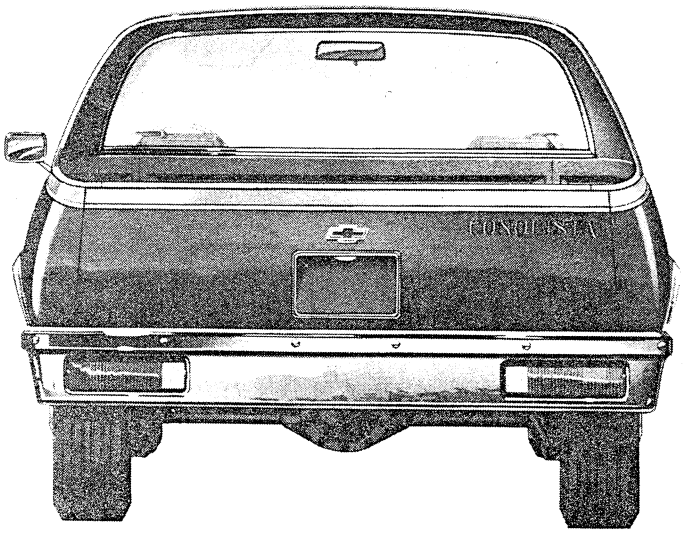

INTERIOR

- **"Conquista" nameplate on instrument panel above glove compartment door**

EL CAMINO

DIMENSIONS

The El Camino pickup box features double-wall construction on the side panels and a ribbed all-steel floor. The tailgate, featuring easy, one-hand operation and grain-tight seal, also has double-wall construction and forms a continuation of the ribbed floor when lowered. The pickup box has a capacity of approximately 35.5 cubic feet.

All El Camino models have a bright metal molding at the top of the box and tailgate to prevent paint chipping when loading or unloading.

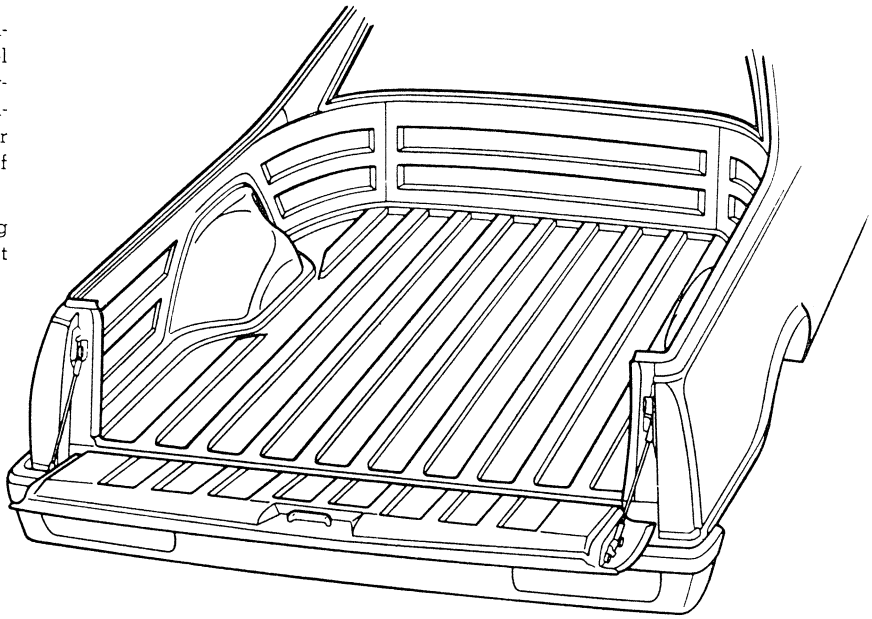

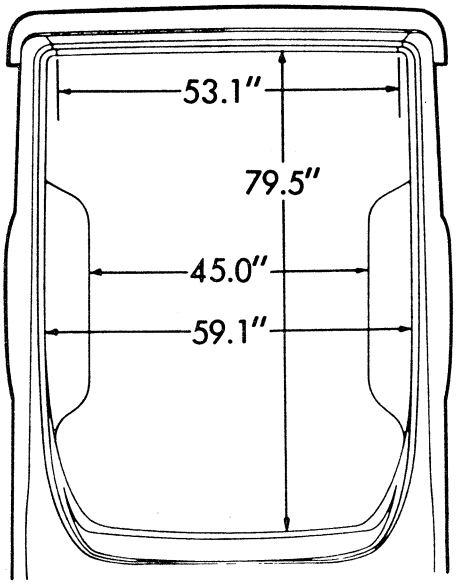

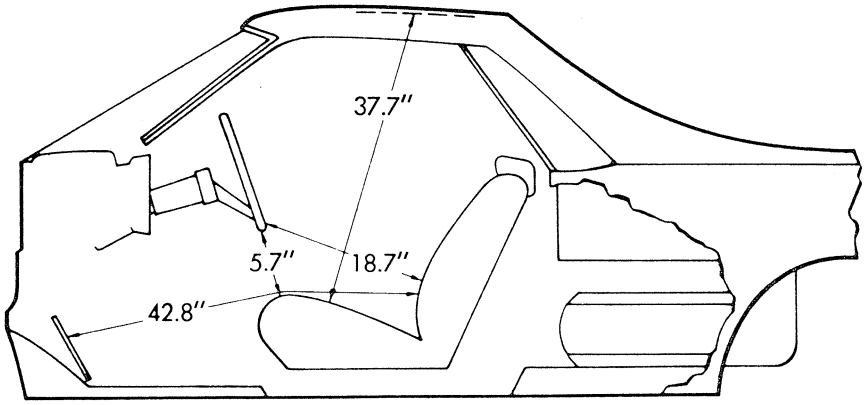

CAB DIMENSIONS*

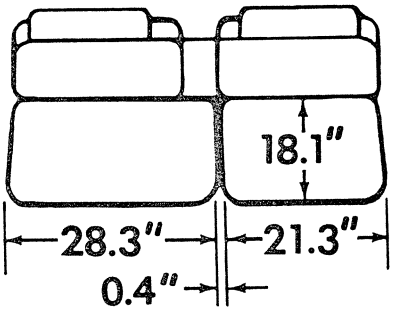

55/45 SEAT W/ARMREST

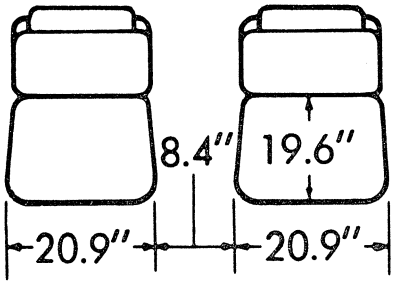

BUCKET SEAT

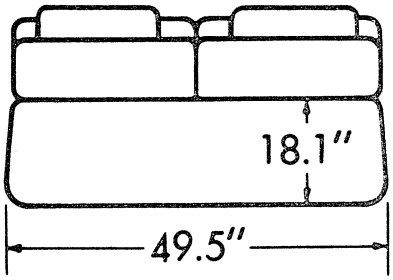

BENCH SEAT

*All interior dimensions measured with seat in rear position.

EL CAMINO

INTERIOR AND EXTERIOR COLOR AVAILABILITY CHART

PLEASE NOTE: *The exterior and interior paint combinations shown in the chart below and designated as recommended (R), represent the ideal combinations. Those that are shown as acceptable (A), are attractive, but less desirable than the recommended combinations. Orders for additional combinations may be submitted, provided the dealer orders (D60), as verification that the requested combination is definitely desired.*

INTERIOR TRIM COLORS AND CODES						
Interior Trim Color			Dark Blue	Camel	Champagne	Maroon
MODEL	SEAT TYPE					
El Camino (Standard Model)	Cloth Bench		CDD1	CCC1		CRR1
	Cloth Bucket		CDD2	CCC2		CRR2
	Cloth 55/45		CDD3	CCC3		CRR3
	Vinyl Bench		VDD1	VCC1	VHH1	VRR1
	Vinyl Bucket		VDD2	VCC2	VHH2	VRR2
	Vinyl 55/45		VDD3	VCC3	VHH3	VRR3
EXTERIOR PAINT COLOR	COLOR CODE Lower	COLOR CODE Upper				
Beige	63	63	R	R		R
Black	19	19		R	R	R
Blue, Dark (Metallic)	29	29	R	R		
Blue, Light (Metallic)	21	21	R			
Brown, Light (Metallic)	68	68		A		
Brown, Medium (Metallic)	69	69		A		
Champagne (Metallic)	36	36			R	
Cream	35	35		A	R	
Green, Light Jade (Metallic)	45	45		A		
Green, Jade (Metallic)	47	47		A		
Maroon (Metallic)	77	77		A		R
Maroon, Light (Metallic)	72	72		R		R
Silver (Metallic)	16	16	R			R
White	11	11	R	R	R	R

R—Recommended
A—Acceptable

EL CAMINO SUPER SPORT

INTERIOR AND EXTERIOR COLOR AVAILABILITY CHART

PLEASE NOTE: *The exterior and interior combinations shown in the chart below are the only combinations that are available.*

INTERIOR TRIM COLORS AND CODES							
Interior Trim Color					Dark Blue	Camel	Maroon
MODEL	SEAT TYPE						
El Camino Super Sport	Cloth Bench				CDD1	CCC1	CRR1
	Cloth Bucket				CDD2	CCC2	CRR2
	Cloth 55/45				CDD3	CCC3	CRR3
	Vinyl Bench				VDD1	VCC1	VRR1
	Vinyl Bucket				VDD2	VCC2	VRR2
	Vinyl 55/45				VDD3	VCC3	VRR3
EXTERIOR PAINT COLOR	COLOR CODE		LOWER PAINT ACCENT COLOR AND ORDERING CODE #		DECAL COLOR SCHEME*		
	Lower	Upper					
Black	19	19	Blue, Light (M)	21M	Blue	R	
Black	19	19	Maroon, Light (M)	72M	Red		R
Black	19	19	Silver (M)	16M	Red		R
Blue, Dark (M)	29	29	Blue, Light (M)	21M	Blue	R	
Blue, Light (M)	21	21	Blue, Dark (M)	29M	Blue	R	
Brown, Light (M)	68	68	Brown, Medium (M)	69M	Gold		R
Brown, Medium (M)	69	69	Black	19M	Gold		R
Maroon (M)	77	77	Black	19M	Gold		R
Maroon (M)	77	77	Black	19M	Red		R
Maroon, Light (M)	72	72	Maroon (M)	77M	Red		R
Silver (M)	16	16	Black	19M	Red		R
Silver (M)	16	16	Blue, Dark (M)	29M	Blue	R	
Silver (M)	16	16	Maroon (M)	77M	Red		R
White	11	11	Brown, Light	68M	Gold	R	
White	11	11	Maroon, Light (M)	72M	Red		R

R — Recommended
(M) — Metallic
*Color determined by exterior color, lower accent color and interior trim combination.
Must be ordered. Specify choice in option portion of order form.

EL CAMINO CONQUISTA

INTERIOR AND EXTERIOR COLOR AVAILABILITY CHART

PLEASE NOTE: *The exterior and interior combinations shown in the chart below are the only combinations that are available.*

INTERIOR TRIM COLORS AND CODES								
Interior Trim Color					Dark Blue	Camel	Champagne	Maroon
MODEL	SEAT TYPE							
El Camino (with Conquista Option D91)	Cloth Bench				CDD1	CCC1		CRR1
	Cloth Bucket				CDD2	CCC2		CRR2
	Cloth 55/45				CDD3	CCC3		CRR3
	Vinyl Bench				VDD1	VCC1	VHH1	VRR1
	Vinyl Bucket				VDD2	VCC2	VHH2	VRR2
	Vinyl 55/45				VDD3	VCC3	VHH3	VRR3
ROOF AND LOWER BODY	CODE		HOOD AND CENTER BODY	CODE				
	Upper	Lower						
Beige	63	63	Maroon (M)	77M		R		
Beige	63	63	Brown, Light (M)	68M		R		
Black	19	19	Champagne (M)	36M			R	
Black	19	19	Maroon, Light (M)	72M				R
Black	19	19	Silver (M)	16M				R
Blue, Dark (M)	29	29	Blue, Light (M)	21M	R			
Blue, Dark (M)	29	29	Silver (M)	16M	R			
Brown, Light (M)	68	68	Brown, Medium (M)	69M		R		
Brown, Medium (M)	69	69	Black	19M		R		
Champagne (M)	36	36	Cream	35M			R	
Maroon (M)	77	77	Silver (M)	16M				R
Maroon, Light (M)	72	72	Maroon (M)	77M				R
Maroon, Light (M)	72	72	White	11M				R
Silver (M)	16	16	Maroon, Light (M)	72M				R
White	11	11	Blue (M)	22M	R			

(M) Metallic (R) Recommended

CONQUISTA TWO-TONE PAINT—D91

Primary Hood and Center Body Color

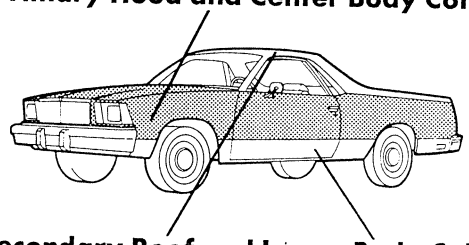

Secondary Roof and Lower Body Color

EL CAMINO ROYAL KNIGHT

INTERIOR AND EXTERIOR COLOR AVAILABILITY CHART

PLEASE NOTE: *The exterior and interior combinations shown in the chart below are the only combinations that are available.*

INTERIOR TRIM COLORS AND CODES						
Interior Trim Color				Dark Blue	Camel	Maroon
MODEL	SEAT TYPE					
El Camino Super Sport (with Royal Knight Option Z16)	Cloth Bench			CDD1	CCC1	CRR1
	Cloth Bucket			CDD2	CCC2	CRR2
	Cloth 55/45			CDD3	CCC3	CRR3
	Vinyl Bench			VDD1	VCC1	VRR1
	Vinyl Bucket			VDD2	VCC2	VRR2
	Vinyl 55/45			VDD3	VCC3	VRR3
EXTERIOR PAINT COLOR	COLOR CODE		DECAL COLOR SCHEME			
	Lower	Upper				
Black	19	19	Gold		R	
Black	19	19	Red			R
Blue, Dark (M)	29	29	Blue	R		
Blue, Light (M)	21	21	Blue	R		
Brown, Light (M)	68	68	Gold		R	
Brown, Medium (M)	69	69	Gold		R	
Maroon (M)	77	77	Gold		R	
Maroon (M)	77	77	Red			R
Maroon, Light (M)	72	72	Red			R
Maroon, Light (M)	72	72	Gold		R	
Silver (M)	16	16	Blue	R		
Silver (M)	16	16	Red			R
White	11	11	Red			R
White	11	11	Blue	R		
White	11	11	Gold		R	

(M) Metallic (R) Recommended

FRONT SUSPENSIONS

INDEPENDENT FRONT SUSPENSION

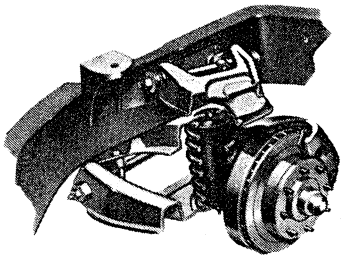

P31832

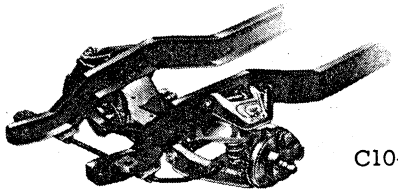

C10–30; P10–30 Series

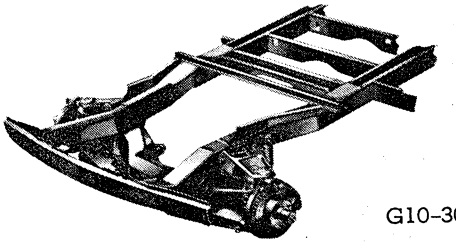

G10–30 Series

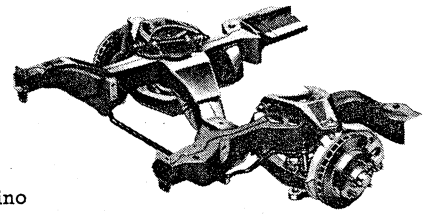

El Camino

The independent front axle suspension uses stamped steel control arms, coil springs, forged steel steering knuckles, forged steel control arm shafts, a stamped steel cross-member, and ball joint pivot points.

FRONT COIL SPRINGS

CAPACITY	MODEL SERIES AVAILABILITY		SPECIFICATIONS		
lbs. each @ Ground	Standard	Optional	Deflection Rate	Wire Diameter	Outside Diameter
953-1259	El Camino	—	365	.653-.693	5.75
1310	G10 (05)	—	800	.779	5.30
1475	C10 (03)	—	675	.742	5.22
1625	—	C10 (03)	800	.779	5.30
1625	C10 (06), C10 Blazer	—	930	.813	5.37
1700	G10 (06), G20, G30 (05)◆	C10 (03), G10 (05)	930	.813	5.37
1700	G31303 (1)	—	1090	.852	5.44
1750	C20 (03)◆	—	800	.779	5.30
1800	P20	—	1090	.852	5.44
1800	—	P20	1350	.890	5.42
1900	C20 (43), C30 (03)	C20 (03), C20 (06)	1090	.852	5.44
1900	C20 (06), C20/C6P (03)	C20 (03)◆	930	.813	5.37
1950	G30/C6P (05), G30 (06), G31303 (2), G31603, G31632, G31332	G31303•	1090	.852	5.44
2000	C30 (43)	—	1090	.852	5.44
2000	C30†	—	1350	.890	5.42
2200	P30 (42) P30832 P31132 P31432	P30 (42)	1350	.890	5.42

FRONT COIL/AIR SPRINGS (Combination Coil with Auxiliary Air Spring)

2500	P31832	P30832, P31132, P31432, P30 (42)▲	1350	.890	5.42

(1) Standard on Hi-Cube Van (E34) at 7400 lb. GVWR, Hi-Cube Van (E31/E36) and Schoolbus Chassis (B3D) at 8900 lb. GVWR, and Commercial Cutaway Van at 7400 lb. and 8900 lb. GVWR.
(2) Standard on 10,000 lb. GVWR (B3D). ★With 8-cyl. engine.
• Required for Hi-Cube and Cutaway Vans at 8600-lb. GVWR.
◆ Without C6P.
†With C7C (HD Chassis with 10,500 GVWR).
▲Available only as part of Special Equipment Option (SEO) 7B1; See Special Equipment Prices Section.

REAR AXLES

EL CAMINO REAR AXLE

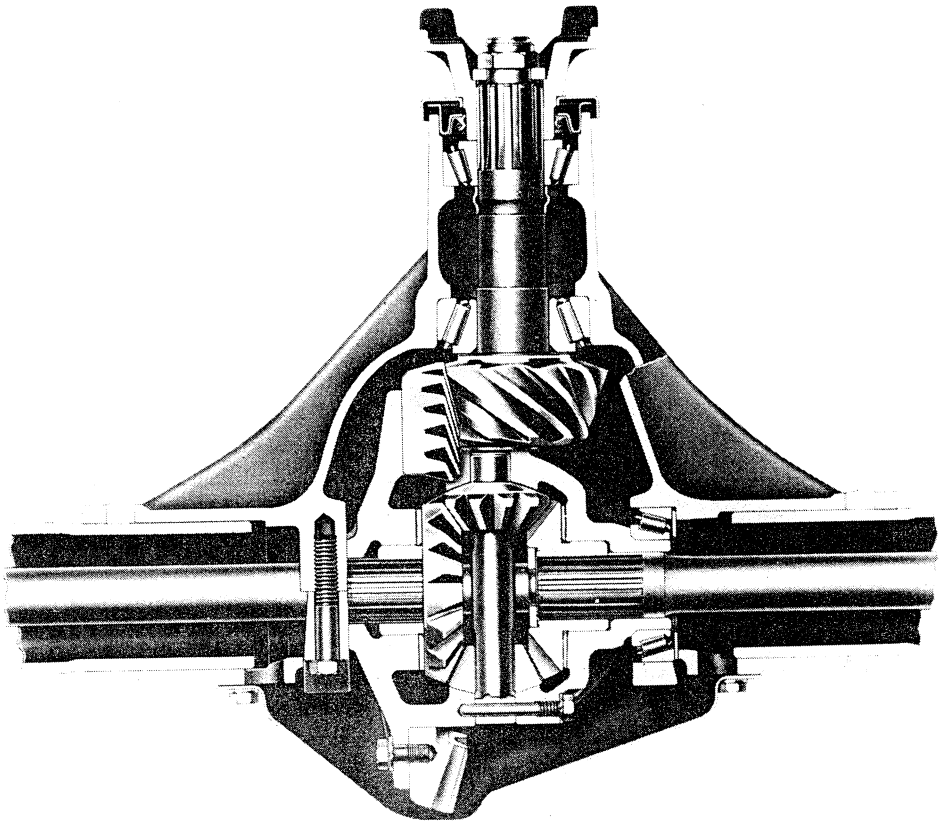

Illustration shows typical El Camino rear axle.

El Camino models offer, as standard, a Salisbury-type rear axle. Hypoid gearing is used for quiet, durable differential operations. A limited slip differential is also available with all ratios as an option at extra cost.

Specifications

Capacity	†2686 lbs			
Make	Chevrolet			
Pinion & Ring Gears: Type	Hypoid			
Ratios	2.41	2.56	2.73	3.08
Pinion, teeth	17	16	15	13
Ring gear, teeth	41	41	41	40
Ring gear pitch dia. (in)	7.50			
Differential: Type	Two-Pinion			
Axle Shaft: Type	Integral Shaft and Drive Flange			
Housing: @ Spring Seat Section diameter and thickness (in)	2.53 x .17			

†Limited by brake certification

SHOCK ABSORBERS

(Hydraulic Direct-Double Acting)

Model Series Availability		Location	Type	Piston Diameter	Piston Travel
Standard	Optional				
El Camino	—	Front	Direct	25 mm	113.91 mm
El Camino	—	Rear	Air Booster	25 mm	210.56 mm
C10	—	Front	Direct	25 mm	134.16 mm
K10-30◆	—	Front		25 mm	172.46 mm
G10-30*	—	Front		25 mm	128.01 mm+
C10	—	Rear		25 mm	229.61 mm
K10-20◆	—	Rear		25 mm	235.96 mm
K30	—	Rear		25 mm	274.06 mm
G10-30*	—	Rear		25 mm	210.56 mm
C20 (03)◆	—	Front		25 mm	134.47 mm
C20 (03)	—	Rear		25 mm	242.32 mm
C20 (06, 43), C30, C20/C6P (03), P20-30 (42)	—	Front		32 mm	134.56 mm
K20/C6P (03), K20 (03†,06)	—	Front		32 mm	172.66 mm
C20/C6P (03) C20 (06)	—	Rear		32 mm	242.51 mm
C20 (43), C30, K20 (06), K20/C6P, K20 (03), P20-30 (42), P30 (32)*	—	Rear		32 mm	236.16 mm
G31303@, G31603/32	—	Front		35 mm	132.43 mm
P30 (32)	—	Front		35 mm	145.17 mm
G31603/32, G31303@	—	Rear		35 mm	253.08 mm
P31832▲	—	Rear		35 mm	208.63 mm
—	C10, G10-30*, C20 (03)	Front		32 mm	134.56 mm
—	K10-20	Front		2-25 mm•	207.39 mm
—	K10-30	Front		32 mm	172.66 mm
—	K10-20	Rear		32 mm	236.16 mm
—	C20 (03)	Rear		32 mm	242.51 mm
—	C10	Rear		32 mm	229.81 mm
—	K30	Rear		32 mm	274.26 mm
—	G10-30*	Rear		32 mm	210.76 mm

+—Piston travel is 134.36 mm for all G11006 and G21005/06 models, and models G11005 and G21305/06 with heavy duty springs
*—Except G31603/32 ★—Except P31832 @—With School Bus Chassis Equipment ◆—Pickup models without C6P
†—Chassis-Cab model only •—RPO Z75, Front Quad Shocks ▲—Also required on P31432 @ 14,500-lb GVWR.

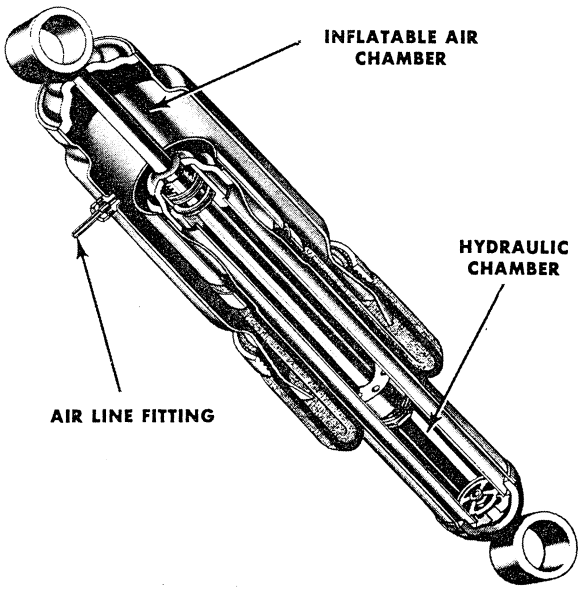

El Camino Rear Shock Absorbers Standard Equipment Air-Booster Type

El Camino load capacity is totally realized when the standard equipment air-booster rear shock absorbers are fully inflated.

Encircled by inflatable air chambers, these shock absorbers can be adjusted by varying the air pressure to meet different road and load conditions. Air pressure is varied through a tire-type air valve located inside the fuel filler door. From the air valve, air feed lines of durable nylon connect to each shock through a tee fitting which also serves as a balance line to equalize the pressure in each shock absorber chamber. The air chamber is independent of the internal shock mechanism, which assures normal control in event of accidental air pressure loss.

A minimum pressure of 10 to 15 psi (70 to 105 kPa) should be maintained at all times. After the vehicle is loaded, pressure may be increased until the rear of the vehicle returns to the normal designed riding height, but not to exceed 90 psi (620 kPa).

NOTICE: Do not use air-adjustable shock absorbers to raise the vehicle above the normal designed riding height, since this may cause severe damage to the shock absorbers or the vehicle mounting brackets.

3.8 LITER (229 2-bbl) V6*

(Ordering Code LC3)

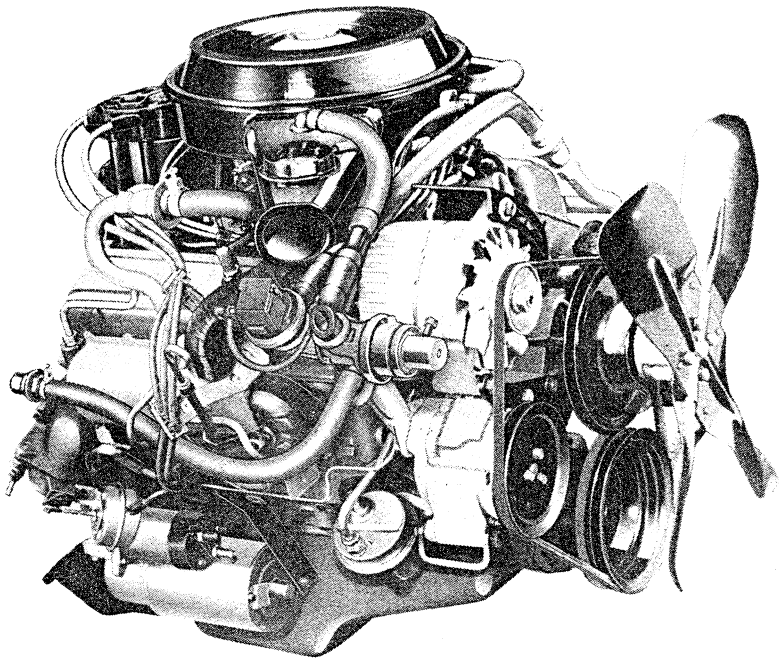

Applications

Standard: El Camino
Optional: None
*Not Available in California

Basic Specifications

Engine type	Valve-in-head
Piston displacement (Liter/Cu. In.)	3.8/229
Bore & stroke (nominal)	3.74" x 3.48"
Compression ratio	8.6:1
Carburetor type	2-barrel
Exhaust—Single	All

Test Procedures

These curves represent full-throttle performance as obtained from a dynamometer test simulating actual operating conditions when the engine is in the vehicle, with ratings corrected to barometric pressure of 29.00" mercury and 85°F dry air.

Engine Ratings

SAE net horsepower (85°F)	110 @ 4200 rpm
SAE net torque, lb-ft (85°F)	170 @ 2000 rpm

3.8 LITER (231 Cu. In.) V6*

(Ordering Code LD5)

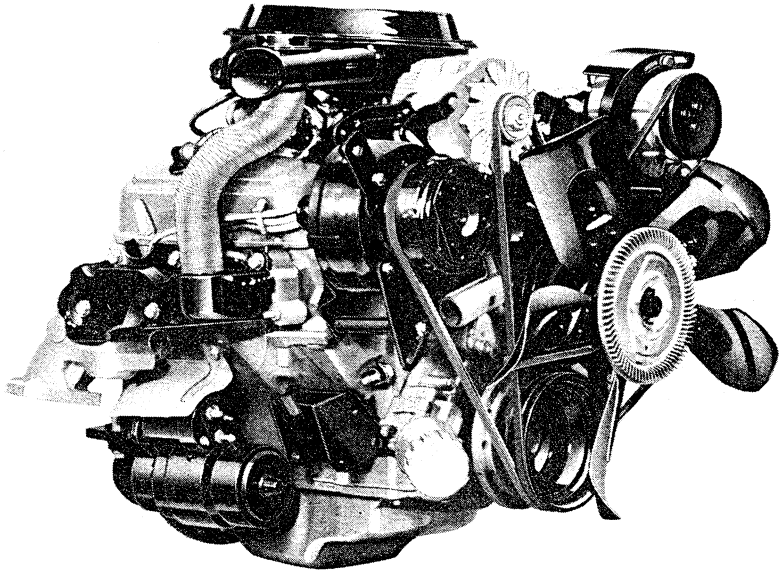

Applications

Standard: None
Optional: El Camino
*Available in California Only

Basic Specifications

Engine type	Valve-in-head
Piston displacement (Liter/Cu. In.)	3.8/231
Bore & stroke (nominal)	3.8" x 3.4"
Compression ratio	8.0 to 1
Carburetor type	2-barrel
Exhaust—Single	All

Test Procedures

These curves represent full-throttle performance as obtained from a dynamometer test simulating actual operating conditions when the engine is in the vehicle, with ratings corrected to barometric pressure of 29.00" mercury and 85°F dry air.

Engine Ratings

SAE net horsepower (85°F)	110 @ 3800 rpm
SAE net torque, lb-ft (85°F)	190 @ 1600 rpm

3.8 LITER (229 Cu. In.), 3.8 LITER (231 Cu. In.) V6 ENGINES

SPECIFICATIONS

	El Camino	
	*3.8 Liter/229 V6 2-bbl	▪3.8 Liter/231 V6 2-bbl
Basic Description	V6; Valve-in-head	
Displacement (Liter/Cu. In.)	3.8/229	3.8/231
Bore & Stroke	3.74 x 3.48	3.80 x 3.40
Compression Ratio	8.6:1	8.0:1
Firing Order	1-6-5-4-3-2	
SAE Net Horsepower @ rpm	110 @ 4200	110 @ 3800
SAE Net Torque (lb-ft) @ rpm	170 @ 2000	190 @ 1600
Air Cleaner	Replaceable paper element	
Camshaft		
Bearings	Steel-backed babbitt	
Intake Valve Opens	42° BTC	16° BTC
(excluding ramps) Closes	78° ABC	63° ABC
Exhaust Valve Opens	78° BBC	68° BBC
(excluding ramps) Closes	52° ATC	29° ATC
Intake Duration w/o ramp	300°	259°
Exhaust Duration w/o ramp	310°	277°
Carburetor		
Type	2-barrel	
Make	Rochester	
Venturi ID (in)	1.218	1.093
Throttle Bore (in)	1.38	1.4375
Choke Control	Automatic	
Connecting Rods		
Material	Drop-forged steel	Cast arma steel
Length (in)	5.70	5.96
Bearings	Premium aluminum	
Crankcase Ventilation	Closed positive	
Crankshaft		
Material	Cast nodular iron	
Number of Counterweights	6	
Main Journal dia (in)	2.45	2.50
Crankpin Journal dia (in)	2.10	
Torsional Damper	Inertia; rubber mounted	
Bearings	Upper and Lower—premium aluminum	
Distributor	High Energy Unit, Delco-Remy	
Fuel Filter		
Carburetor	Pleated fiber element	
Fuel Tank	Plastic strainer	
Lubrication System	Controlled full pressure	
Main Bearings	Direct pressure	
Camshaft Bearings	Direct pressure	
Timing Gear	Centrifugally sprayed	
Connecting Rods	Direct pressure	
Valve Mechanism	Pressure & gravity	
Cylinder Walls	Cross sprayed throw-off from rod bearing	
Piston Pins	Cross sprayed throw-off from rod bearing	
Oil Capacity (qts)		
With filter change	4.5	
W/o filter change	4	

*Not available in California ▪Available in California only

3.8 LITER (229 Cu. In.), 3.8 LITER (231 Cu. In.) V6 ENGINES

SPECIFICATIONS

	El Camino	
	*3.8 Liter/229 V6 2-bbl	▪3.8 Liter/231 V6 2-bbl
Oil Filter	Throwaway	
Capacity (qts)	.43	.31
Oil Pump		
Type	Spur gear; distributor shaft driven	
Capacity (gpm)	4.3 @ 2000 rpm	
Normal Pressure (psi)	45 @ 2000 rpm	35 @ 2000 rpm
Pistons		
Material	Cast aluminum alloy	
Skirt	Closed	Full w/transverse slot
Head	Sump	Dished
Piston Pins		
Type	Rod shrink fit to pin	
Material	Chromium steel	
Piston Rings		
Compression Rings		
Number	2	
Type	Upper—barrel; lower—inside bevel	
Material	Cast iron alloy	
Oil Control Ring	Spacer-expander with upper and lower rails	
Number	1	
Type	Multi-piece	
Material	Steel	
Thermostat	Harrison; 195°	
Valve Train		
Type	Individually mounted rocker arms, push rod actuated	
Lifters	Hydraulic	
Rocker Arm Ratio	1.50:1	
Valve Guides	Integral with cylinder head	
Valve Lash	Zero	
Intake Valves		
Material	Alloy steel	
Diameter (in.)	1.84	1.71
Face Coatings	None	
Seats	Machined in cylinder head	
Exhaust Valves		
Material	High alloy steel	
Diameter (in.)	1.50	
Face Coating	Plain head & seat, full chrome	Nickel plated head
Seats	Machined in cyl. head; induction hardened	
Rotators (exhaust)	Yes	
Water Pump		
Type	Centrifugal	
Capacity (gpm)	21.6 @ 2000 rpm	

*Not available in California ▪Available in California only

4.4 LITER (267 Cu. In.) V8*

(Ordering Code L39)

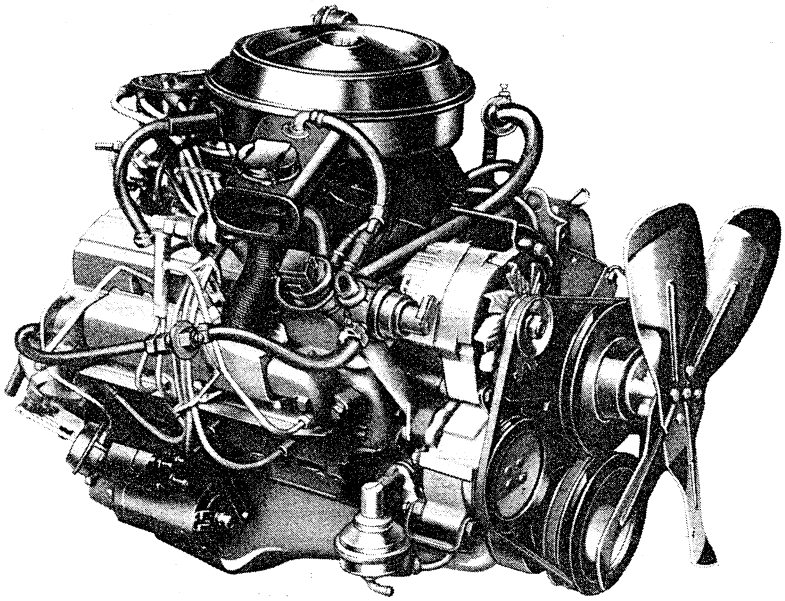

Applications

Standard: None
Optional: El Camino
*Not Available in California

Basic Specifications

Engine type	Valve-in-head
Piston displacement (Liter/Cu. In.)	4.4/267
Bore & stroke (nominal)	3.50" x 3.48"
Compression ratio	8.3:1
Carburetor type	2-barrel
Exhaust—Single	All

Test Procedures

These curves represent full-throttle performance as obtained from a dynamometer test simulating actual operating conditions when the engine is in the vehicle, with ratings corrected to barometric pressure of 29.00" mercury and 85°F dry air.

Engine Ratings

All States Except California

SAE net horsepower (85°F)	115 @ 4000 rpm
SAE net torque, lb-ft (85°F)	200 @ 2400 rpm

4.4 LITER (267 Cu. In.) V8 ENGINE

SPECIFICATIONS

	El Camino
	*4.4 Liter/267 V8 2-bbl.
Basic Description	V8; valve-in-head
Displacement (Liter/Cu. In.)	4.4/267
Bore & Stroke	3.50 x 3.48
Compression Ratio	8.3:1
Firing Order	1-8-4-3-6-5-7-2
SAE Net Horsepower @ rpm	115 @ 4000
SAE Net Torque (lb-ft) @ rpm	200 @ 2400
Air Cleaner	Replaceable paper element
Camshaft	
Bearings	Steel backed babbitt
Intake Valve Opens	44° BTC
(excluding ramps) Closes	76° ABC
Exhaust Valve Opens	78° BBC
(excluding ramps) Closes	52° ATC
Intake Duration w/o ramp	300°
Exhaust Duration w/o ramp	310°
Carburetor	
Type	2-barrel
Make	Rochester
Venturi ID (in)	1.218
Throttle Bore (in)	1.38
Choke Control	Automatic
Connecting Rods	
Material	Drop-forged Steel
Length (in)	5.70
Bearings	Premium aluminum
Crankcase Ventilation	Closed positive
Crankshaft	
Material	Cast nodular iron
Number of Counterweights	6
Main Journal dia (in)	2.45
Crankpin Journal dia (in)	2.10
Torsional Damper	Inertia; rubber mounted
Bearings	Upper—Micro-babbitt or copper lead; Lower premium aluminum
Distributor	High Energy Unit, Delco-Remy
Fuel Filter	
Carburetor	Pleated fiber element
Fuel Tank	Plastic strainer
Lubrication System	Controlled full pressure
Main Bearings	Direct pressure
Camshaft Bearings	Direct pressure
Timing Gear	Centrifugally sprayed
Connecting Rods	Direct pressure
Valve Mechanism	Pressure & gravity
Cylinder Walls	Cross sprayed throw-off from rod bearing
Piston Pins	Cross sprayed throw-off from rod bearing
Oil Capacity (qts)	
With filter change	4.625
W/o filter change	4

*Not available in California

SPECIFICATIONS

	El Camino
	*4.4 Liter/267 V8 2-bbl
Oil Filter	Throwaway
Capacity (qts)	.625
Oil Pump	
Type	Spur gear; distributor shaft driven
Capacity (gpm)	4.3 @ 2000 rpm
Normal Pressure (psi)	45 @ 2000 rpm
Pistons	
Material	Cast aluminum alloy
Skirt	Closed
Head	Sump
Piston Pins	
Type	Rod shrink fit to pin
Material	Chromium steel
Piston Rings	
Compression Rings	
Number	2
Type	Upper—radius; lower—reverse twist
Material	Cast iron alloy
Oil Control Ring	
Number	1
Type	Multi-piece
Material	Steel
Thermostat	Harrison; 195°
Valve Train	
Type	Individually mounted rocker arms, push rod actuated
Lifters	Hydraulic
Rocker Arm Ratio	1.50:1
Valve Guides	Integral with cylinder head
Valve Lash	Zero
Intake Valves	
Material	Alloy steel
Diameter (in.)	1.72
Face Coatings	None
Seats	Machined in cylinder head
Exhaust Valves	
Material	High alloy steel
Diameter (in.)	1.38
Face Coating	Aluminized
Seats	Machined in cyl. head; induction hardened
Rotators (exhaust)	Yes
Water Pump	
Type	Centrifugal
Capacity (gpm)	21.6 @ 2000 rpm

*Not available in California

5.0 LITER (305 Cu. In.) V8

(Ordering Code LG4)

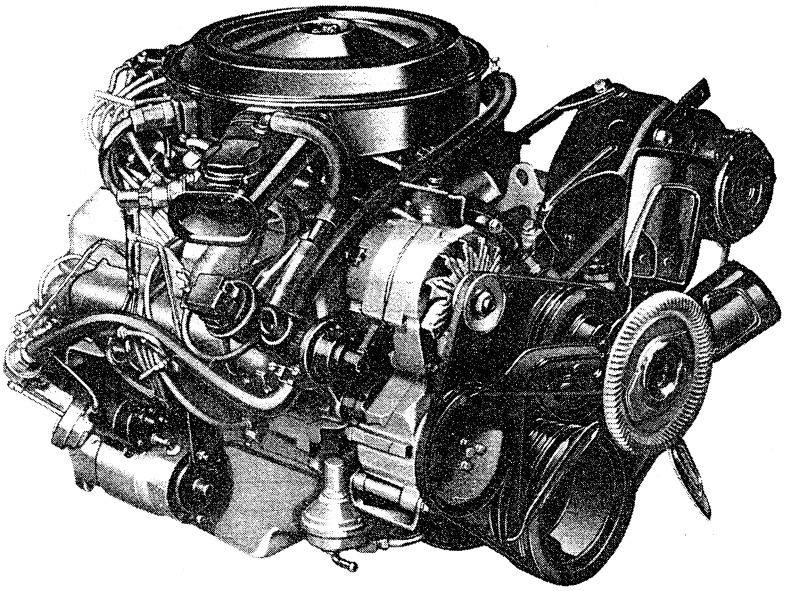

Applications

Standard: None
Optional: El Camino

Basic Specifications

Engine type	Valve-in-head
Piston displacement (Liter/Cu. In.)	5.0/305
Bore & stroke (nominal)	3.74" x 3.48"
Compression ratio	8.6:1
Carburetor type	4-barrel
Exhaust—Single	All

Test Procedures

These curves represent full-throttle performance as obtained from a dynamometer test simulating actual operating conditions when the engine is in the vehicle, with ratings corrected to barometric pressure of 29.00" mercury and 85°F dry air.

Engine Ratings

All States

SAE net horsepower (85°F)	145 @ 3800 rpm
SAE net torque, lb-ft (85°F)	240 @ 2400 rpm

HIGH TORQUE 5.0 LITER (305 Cu. In.) 4-bbl V8*

(Ordering Code LF3)

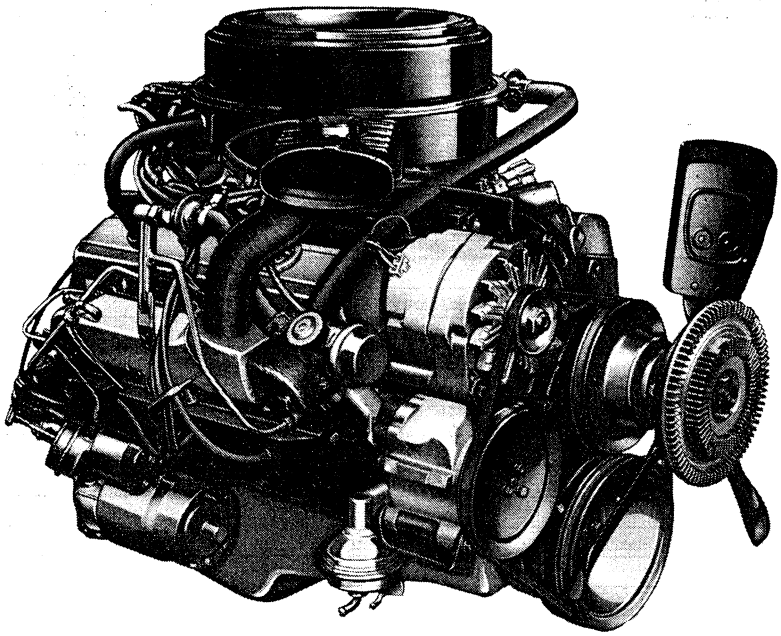

Typical Engine Shown

Applications

Standard: None
Optional: C10 Pickup and Blazer; G10-20 Chevy Van
*Available in California only

Basic Specifications

Engine type	Valve-in-head
Piston displacement (Liter/Cu. In.)	5.0/305
Bore & stroke (nominal)	3.74" x 3.48"
Compression ratio	8.6:1
Carburetor type	4-barrel
Exhaust—Single	All

Test Procedures

These curves represent full-throttle performance as obtained from a dynamometer test simulating actual operating conditions when the engine is in the vehicle, with ratings corrected to barometric pressure of 29.00" mercury and 85°F dry air.

Engine Ratings

Light Duty Emissions
(8500 lbs GVWR and under)

SAE net horsepower (85°F) . . . . . 150 @ 4200 rpm
SAE net torque, lb-ft (85°F) . . . . . 240 @ 2000 rpm

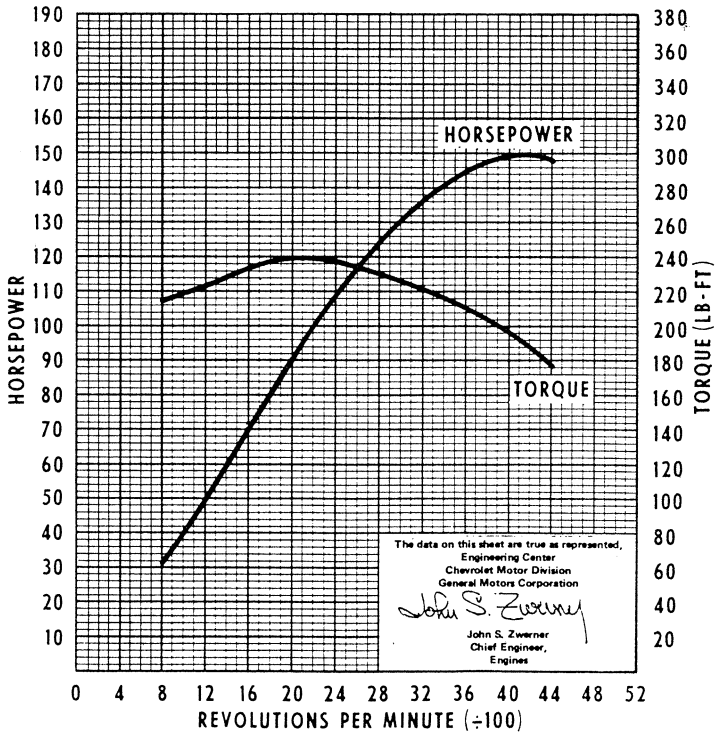

5.0 LITER (305 Cu. In.) V8 ENGINES

SPECIFICATIONS

	El Camino	Series 10-20(LG9)	Series 10-20(LE9)	Series 10-20(LF3)
	5.0 Liter/305 4-bbl	**★5.0 Liter/305 2-bbl**	**★5.0 Liter/305 4-bbl**	**▲5.0 Liter/305 4-bbl**
Basic Description	V8; valve-in-head			
Displacement (Liter/cu in)	5.0/305	5.0/305	5.0/305	5.0/305
Bore & Stroke	3.74 x 3.48	3.74 x 3.48	3.74 x 3.48	3.74 x 3.48
Compression Ratio	8.6:1	8.5:1	9.2:1	8.6:1
Firing Order	1-8-4-3-6-5-7-2			
SAE Net Horsepower @ rpm	145 @ 3800	130 @ 4000	†160 @ 4400	150 @ 4200
SAE Net Torque (lb-ft) @ rpm	240 @ 2400	240 @ 2000	†235 @ 2000	240 @ 2000
Air Cleaner	Thermostatically controlled; Oil wetted paper element			
Camshaft				
Bearings	Steel-backed babbitt			
Intake Valve (at .004" cam lift) Opens	16° BTC			
Intake Valve (at .004" cam lift) Closes	228° ATC			
Exhaust Valve (at .004" cam lift) Opens	234° BTC			
Exhaust Valve (at .004" cam lift) Closes	25° ATC			
Intake Duration	244°			
Exhaust Duration	259°			
Carburetor				
Type	4-barrel	2-barrel	4-barrel	4-barrel
Make	Rochester			
Venturi ID (in.)	1.093	1.218		
Throttle Bore (in.)	Pri.-1.38; Sec.-2.25	1.69	Pri.-1.38; Sec.-2.25	Pri.-1.38; Sec.-2.25
Choke Control	Automatic (Electric)			
Connecting Rods				
Material	Drop-forged Steel			
Length (in)	5.695-5.705			
Bearings	Premium aluminum			
Crankcase Ventilation	Closed positive			
Crankshaft				
Material	Cast nodular iron			
Number of Counterweights	6			
Main Journal dia (in)	2.45			
Crankpin Journal dia (in)	2.10			
Torsional Damper	Inertia; rubber mounted			
Bearings	Upper—Micro-babbitt or copper lead; Lower—premium aluminum			
Distributor	High Energy Unit, Delco-Remy; centrifugal & vacuum advance			
Fuel Filter				
Carburetor	Pleated fiber element			
Fuel Tank	Plastic strainer			
Lubrication System	Controlled full pressure			
Main Bearings	Direct pressure			
Camshaft Bearings	Direct pressure			
Timing Gear	Centrifugally sprayed			
Connecting Rods	Direct pressure			
Valve Mechanism	Pressure & gravity			
Cylinder Walls	Cross sprayed throw-off from rod bearing			
Piston Pins	Cross sprayed throw-off from rod bearing			
Oil Capacity (qts)				
With filter change	4.625	5		
W/o filter change	4			

★Not available in California ▲Available in California only

†The following ratings apply to C10 Pickups only: SAE Net Horsepower . . . . . 165 @ 4400 rpm
SAE Net Torque (lb-ft.) . . . . 240 @ 2000 rpm

5.0 LITER (305 Cu. In.) V8 ENGINES

SPECIFICATIONS

	El Camino	Series 10-20 (LG9)	Series 10-20 (LE9)	Series 10-20 (LF3)
	5.0 Liter/305 4-bbl	★5.0 Liter/305 2-bbl	★5.0 Liter/305 4-bbl	▲5.0 Liter/305 4-bbl
Oil Filter	Throwaway	Throwaway		
Capacity (qts)	.625	.85		
Oil Pump				
Type	Spur gear; distributor shaft driven			
Capacity (gpm)	4.3 @ 2000 rpm			
Normal Pressure (psi)	45 @ 2000 rpm			
Pistons				
Material	Cast aluminum alloy			
Skirt	Closed			
Head	Sump*			
Piston Pins				
Type	Rod shrink fit to pin			
Material	Chromium steel			
Piston Rings				
Compression Rings				
Number	2			
Type	Upper—barrel; lower—inside bevel			
Material	Cast iron alloy			
Oil Control Ring				
Number	1			
Type	Multi-piece			
Material	Steel			
Thermostat	Harrison; 195°			
Valve Train				
Type	Individually mounted rocker arms, push rod actuated			
Lifters	Hydraulic			
Rocker Arm Ratio	1.50:1			
Valve Guides	Integral with cylinder head			
Valve Lash	Zero			
Intake Valves				
Material	Alloy steel			
Diameter (in.)	1.84	1.72	1.84	1.84
Face Coatings	None			
Seats	Machined in cylinder head			
Exhaust Valves				
Material	High alloy steel			
Diameter (in.)	1.50			
Face Coating	Aluminized			
Seats	Machined in cyl. head; induction hardened			
Rotators (exhaust)	Yes			
Water Pump				
Type	Centrifugal			
Capacity (gpm)	21.6 @ 2000 rpm			

★Not available in California
▲Available in California only

*Chamfered top land on light duty emissions

TRANSMISSIONS

EL CAMINO

3-, 4-SPEED TRANSMISSIONS

Type	Chevrolet 3-Speed	Chevrolet 4-Speed
Applications	3.8 Liter (229) V6	5.0 Liter (305) V8
Synchronized Speeds:	All forward	
Gear Ratios:		
First	3.50	2.85
Second	1.89	2.02
Third	Direct	1.35
Fourth	—	Direct
Reverse	3.62	2.85
Gears:		
Type	Helical	
Material	Forged steel; hardened	
Gearshift Control:		
Type	Manual linkage	
Location	Floor	

LUV PICKUP

4-SPEED TRANSMISSION

Type	LUV 4-Speed	
Applications	CL10503/CL10803	CR10503
Synchronized Speeds	All forward	
Gear Ratios:		
First	4.13	3.79
Second	2.50	2.18
Third	1.48	1.42
Fourth	Direct	Direct
Reverse	3.83	3.83
Gears:		
Type	Helical	
Material	Forged steel; hardened	
Gearshift Control:		
Type	Manual linkage	
Location	Floor	

EL CAMINO, LUV PICKUP

AUTOMATIC TRANSMISSION

Type	Automatic	
Applications	LUV 4-cylinder	3.8 Liter (229) V6 *3.8 Liter (231) V6 4.4 Liter (267) V8 5.0 Liter (305) V8
Drive (Maximum Torque Multiplication)	6.08:1	5.04:1
Cooling	Water	
Gearshift Control:		
Type	Manual linkage	
Location	Floor	Floor

*Available in California only.

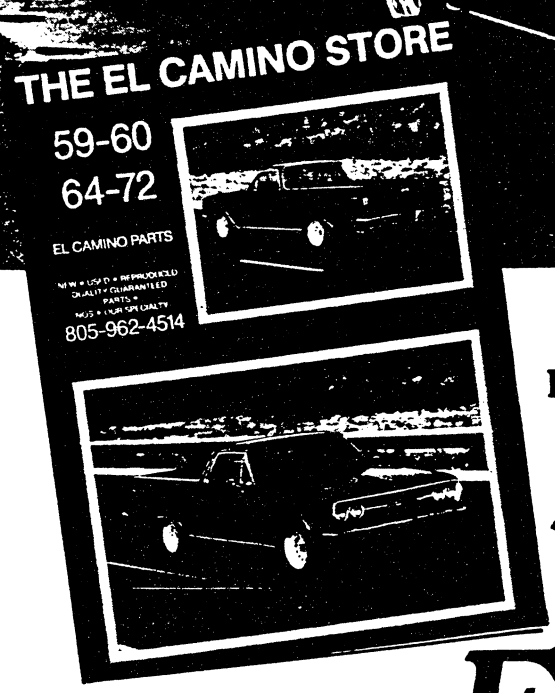

Golden State Pickup Parts is at it again!

The El Camino Store

Photos by Doug Marion

Over the years, whenever readers called us seeking parts or restoration help for their Chevy pickups, we referred them directly to Seth Doulton's Golden State Pickup Parts in Santa Barbara, California. Because of his close proximity to Los Angeles and our similar interests, we've known Seth for a decade. If you live elsewhere, though *Hemming's Motor News* usually lists several other truck parts firms of national repute.

How good is Golden State? Well, they offer a lifetime warranty on just about everything they sell, and *SC* has never received a call back from anyone seeking more information.

So what's new at Golden State Pickup Parts? Well two years ago, Seth called *SC* with an idea. It seems that El Camino owners are always calling him for parts and information. Would a division of Golden State Pickup Parts, called

El Camino Store and Golden State Pickup Parts has a well-stocked showroom. Stop by anytime.

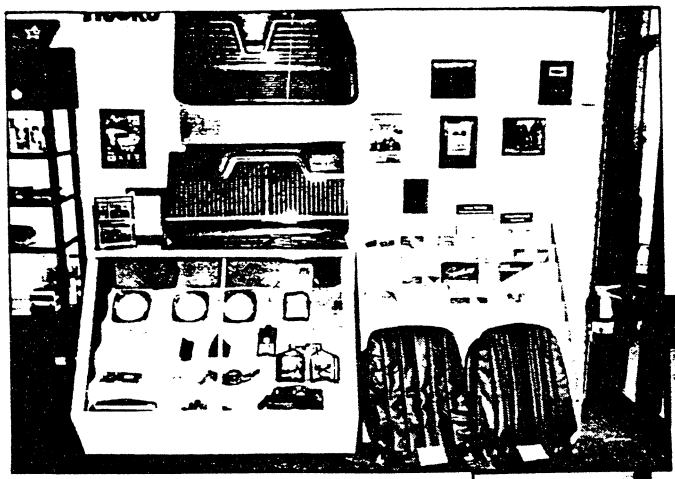

El Camino chrome trim, shop manuals, door panels and bucket seat covers on display.

Need rechromed trim and moldings for your 1947-1972 Chevy or GMC pickup or 1959-1972 El Camino?

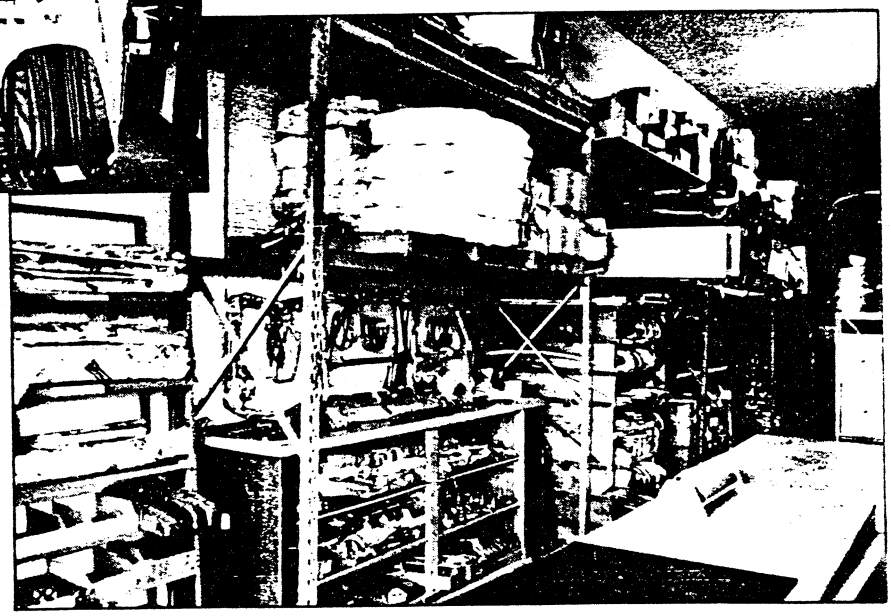

The El Camino Store, be viable? SC said yes, Seth agreed and the rest is history.

We have purposely refrained from mentioning The El Camino Store too much because with only so much time in a day, week and month, we wanted Seth and crew to get their feet on the ground. As anyone will tell you, servicing everyone's needs is a never-ending job, but at this point in time The El Camino Store is a viable source to satisfy your needs and wants. They have a very professional 50-page catalog covering 1959-1960 and 1964-1972 El Caminos, which costs $3.

Parts sold at The El Camino Store are backed by the same warranty that applies to other truck parts sold by Golden State. It reads: "The El Camino Store will fully back and replace any part that they sell that becomes defective because of workmanship or material for the life of your truck. That's right, if you buy a chrome bumper from them and in 10 years it rusts, they will replace it free with proof of purchase." They sell new, used and reproduced parts. NOS is their specialty. •

THE EL CAMINO STORE
618 E. Gutierrez St.
Santa Barbara, CA 93103
(805) 962-4514

Here's a before-and-after pickup heater system. Both firms sponsor "Chevy Madness Day," a huge event held in November at Magic Mountain, north of Los Angeles.

Here are the guys and gals at The El Camino Store /Golden State Pickup Parts. Guy at top-rear is Seth Doulton.

'81 CHEVY EL CAMINO

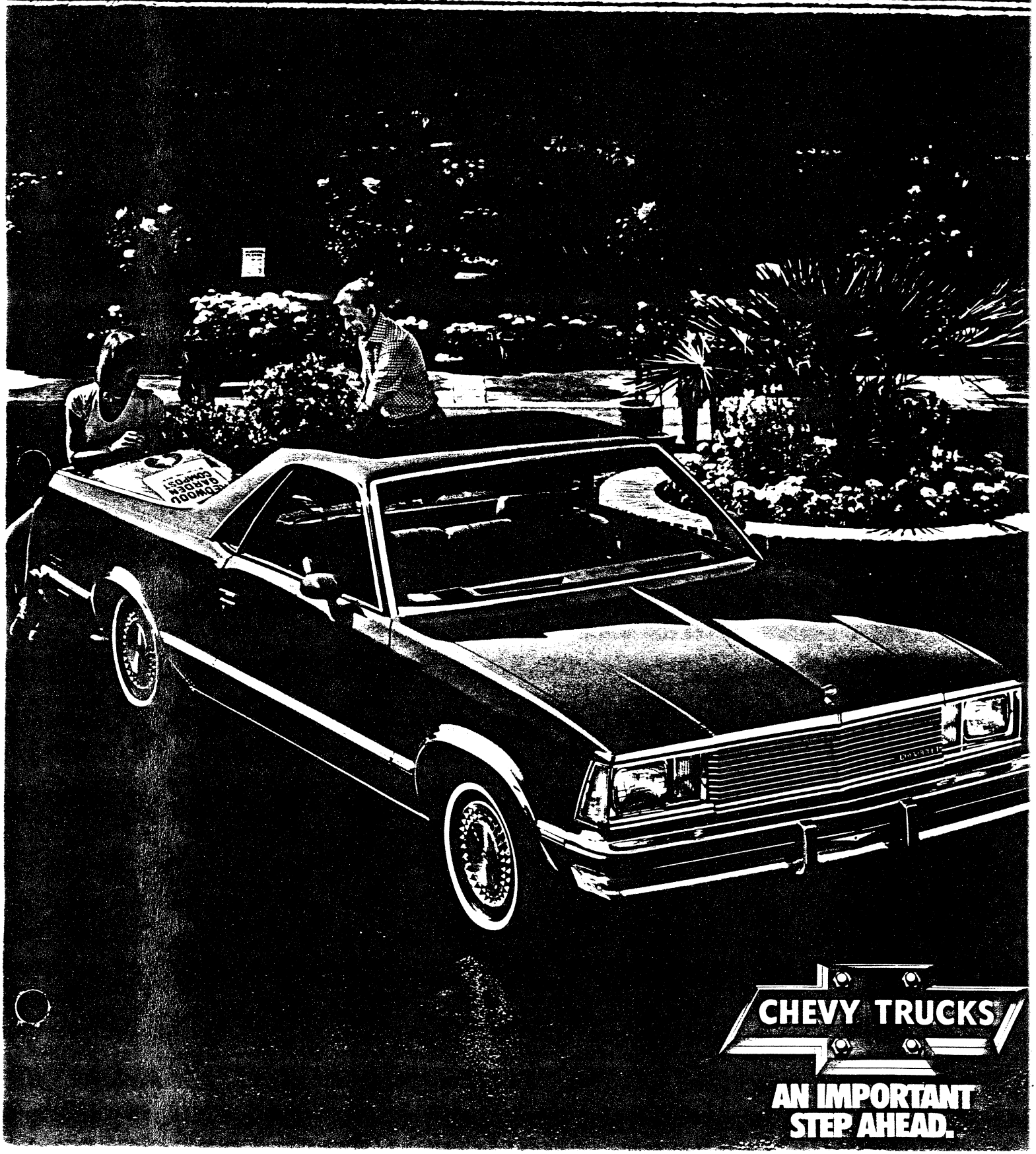

1981 CHEVY EL CAMINO.

The proven ability of a hardworking truck with the appeal of a thoroughly handsome automobile. That's El Camino. It's a proven combination of rugged beauty, elegance and value. But there are some improvements: fresh styling inside and out, technological refinements, new options, ten new colors, and new elegance. Now add to the El Camino's impressive fuel efficiency* with the standard V6 and manual 3-speed transmission, and you can see why it's an important step ahead for 1981.

*See your Chevrolet dealer to obtain EPA fuel economy estimates for Chevy El Camino.

A word about this catalog. We have tried to make this catalog as comprehensive and factual as possible and we hope you find it helpful. However, since the time of printing, some of the information you will find here may have been updated. Also, some of the equipment shown or described in this catalog are available as factory-installed options, dealer-installed accessories and specialized equipment from various independent suppliers at extra cost. Your dealer has details and, before ordering, you should ask him to bring you up to date. The GM is reserved to make changes at any time, without notice, in prices, colors, materials, equipment, specifications and models. Check with your dealer for complete information.

IT WORKS HARD.

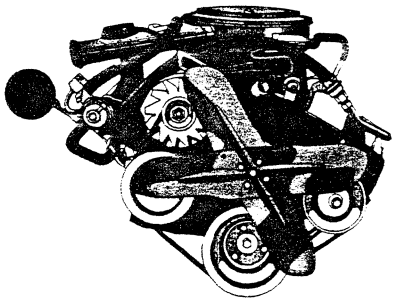

STANDARD V6 POWER.

For impressive fuel economy* and performance, the 3.8 Liter V6 is the standard El Camino engine. Or you can choose from one of two optional V8 engines. The 4.4 Liter (267 Cu. In.) V8 with staged 2-barrel carburetor (not available in California) or the 5.0 Liter (305 Cu. In.) V8 with 4-barrel carburetor.

CHOICE OF TRANSMISSIONS.

El Camino offers a choice of transmissions, too. A 3-speed manual transmission is standard. Or you may choose the optional 4-speed manual (not available in California) or optional automatic transmission. Automatic transmission is required in California on all engines.

A WORD ABOUT ENGINES.

Chevrolet trucks are equipped with GM-built engines produced by various divisions. See your dealer for details.

Please refer to Chevy power-team engine information on page 9.

*For light-duty Chevrolet truck EPA mileage estimates, check the wall poster displayed at your Chevrolet dealer's showroom, or ask for an EPA mileage sheet to take home with you.

ADDED ANTI-CORROSION MEASURES.

The new Chevy El Camino has undergone even more corrosion resisting treatments this year: a cathodic ELPO body coating, a hot melt wax frame coating, and a Zincroterne® coating for brake and fuel lines. And a big plus is Chevy's Three-Year Perforation-From-Corrosion Limited Warranty. Exhaust system components not included. See your Chevrolet dealer for details on other limitations.

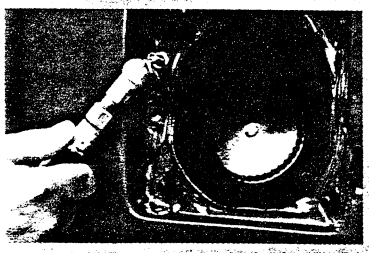

STANDARD AIR-ADJUSTABLE SHOCKS.

Standard air-adjustable rear shock absorbers help level the El Camino at any load up to the maximum load rating. They help prevent "bottoming out" with heavy loads. Air valve is located inside fuel filler door for convenience.

DOUBLE-WALL CONSTRUCTION.

El Camino's cargo box walls and tailgate are constructed of two panels of steel. The inside can take minor nicks and dents without showing through to the outside. Doors and hood have double-wall construction, too. And outer fenders have the protection of an inner fender.

CONCEALED STORAGE INSIDE.

This convenient storage space lies behind the driver's seat and under the pickup box. There's easy access from either side, and the spare tire includes an extractor for easy removal.

IT WORKS BEAUTIFULLY.

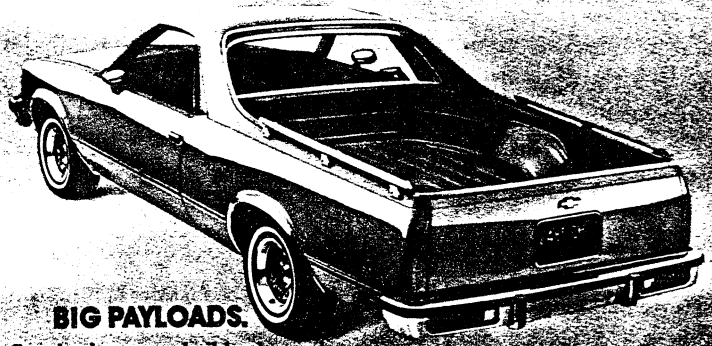

BIG PAYLOADS.

El Camino's rugged ribbed steel cargo bed can hold up to 35.5 cubic feet of cargo—up to 1250 lbs. of gross payload (including cargo and passengers).

NEW STYLING.

That dramatic El Camino beauty has been refined this year with a new grille design, new parking lamps, new headlamp bezels and new colors.

NEW INTERIOR COMFORT.

El Camino's interior has been made even more appealing for 1981. A restyled instrument panel pad, elegant new door pull straps, luxurious seat trim and power steering are standard on all models.

NEW WHEEL COVERS.

Tastefully restyled, diamond-patterned full wheel covers are standard for 1981.

IT'S AN IMPORTANT STEP AHEAD.

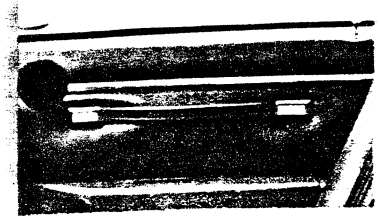

NEW STYLISH DOOR PULL STRAPS.

Heavy vinyl door pull straps are both functional and attractive additions to El Camino's interior.

COMPUTER COMMAND CONTROL.

Every 1981 gasoline-engined El Camino includes a sophisticated, thoroughly tested on-board computer as standard equipment. It gives you the cleanest-burning gasoline engines in Chevrolet's history. And points the way to impressive fuel economy.

That's just the beginning of the benefits. By continuously monitoring your engine's performance, Computer Command Control continuously adjusts the performance of your truck under all operating conditions—as you drive. Air-fuel mixtures are constantly adjusted to driving conditions, and the system adjusts for altitude and barometric pressure changes. And, when compared to last year, it actually reduces the number of recommended maintenance operations.

Computer Command Control is also self-diagnostic. In fact, should a malfunction occur, the system will help diagnose it and pinpoint the problem for your service technician. Another benefit of Computer Command Control is that it is covered by the 5-year/50,000-mile emission system warranty. Ask your dealer for details.

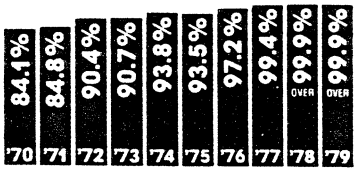

TOUGH RECORD TO BEAT.

94.4% of all Chevy Light-, Medium-, Heavy-Duty trucks and commercial vans in the ten most recent years recorded were still on the job. (Based on R. L. Polk & Co. model year registration statistics through July 1, 1979. 1980 statistics not available at time of printing.)

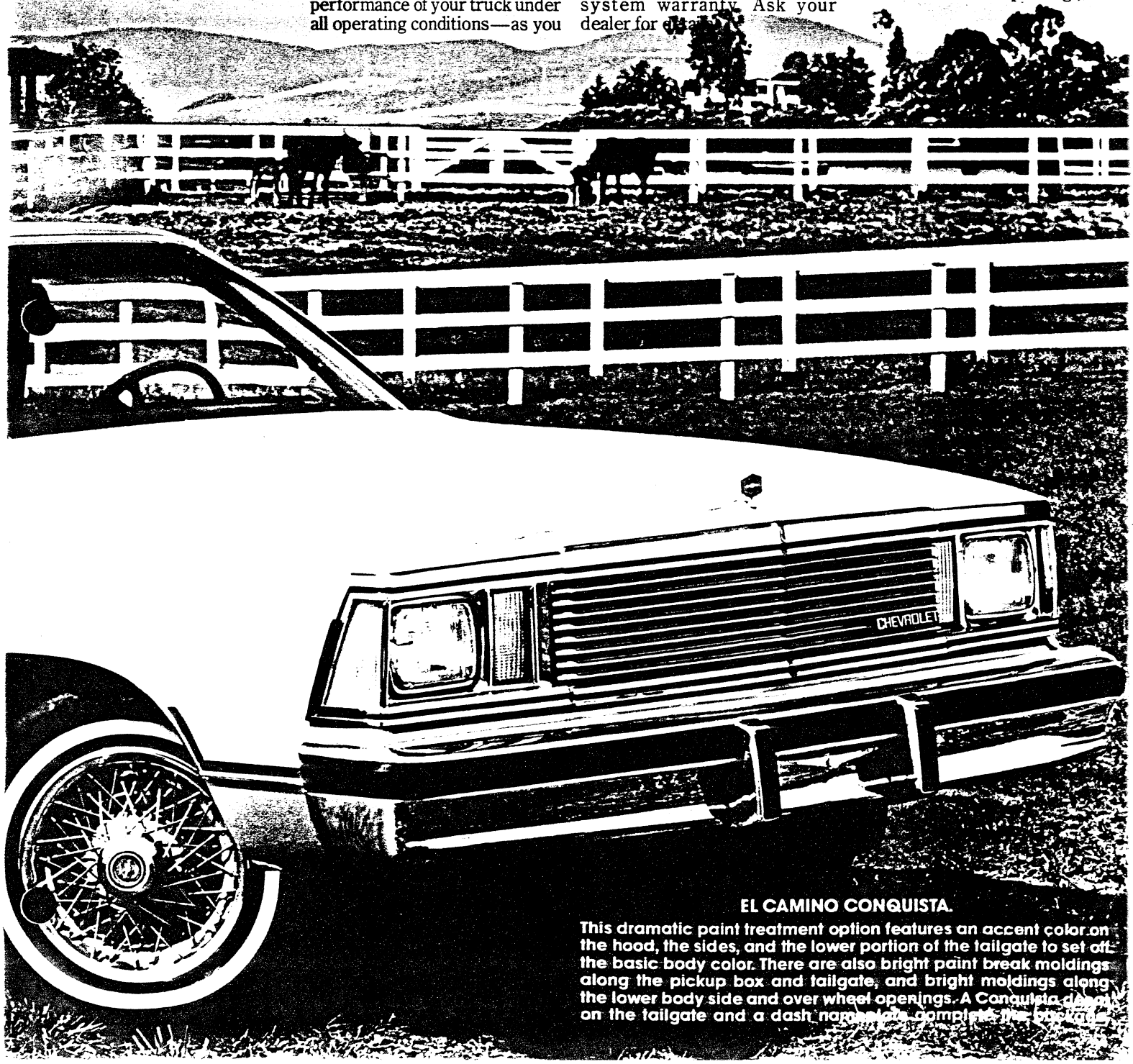

EL CAMINO CONQUISTA.

This dramatic paint treatment option features an accent color on the hood, the sides, and the lower portion of the tailgate to set off the basic body color. There are also bright paint break moldings along the pickup box and tailgate, and bright moldings along the lower body side and over wheel openings. A Conquista decal on the tailgate and a dash nameplate complete the package.

THREE VERY DISTINCTIVE EL CAMINOS.

EL CAMINO. Our base El Camino is a logical choice for people looking for value. It's as hardworking as it is elegant. Standard features include door-to-door cut-pile carpeting, four-inch-thick foam cushioned bench seats, power steering, power brakes, door pull straps, bright window and lower body sill moldings, full wheel covers, higher pressure steel-belted radial ply tires and more.

ROYAL KNIGHT. It takes a special person to choose the Royal Knight package: a striking option to the Super Sport model. It bears a regal hood decal, tri-tone pin-striping, Royal Knight identification on the front fenders and tailgate—each color-keyed to the body color you choose. Other sporty features in this package are a large front air dam, Rally wheels, and painted sport mirrors.

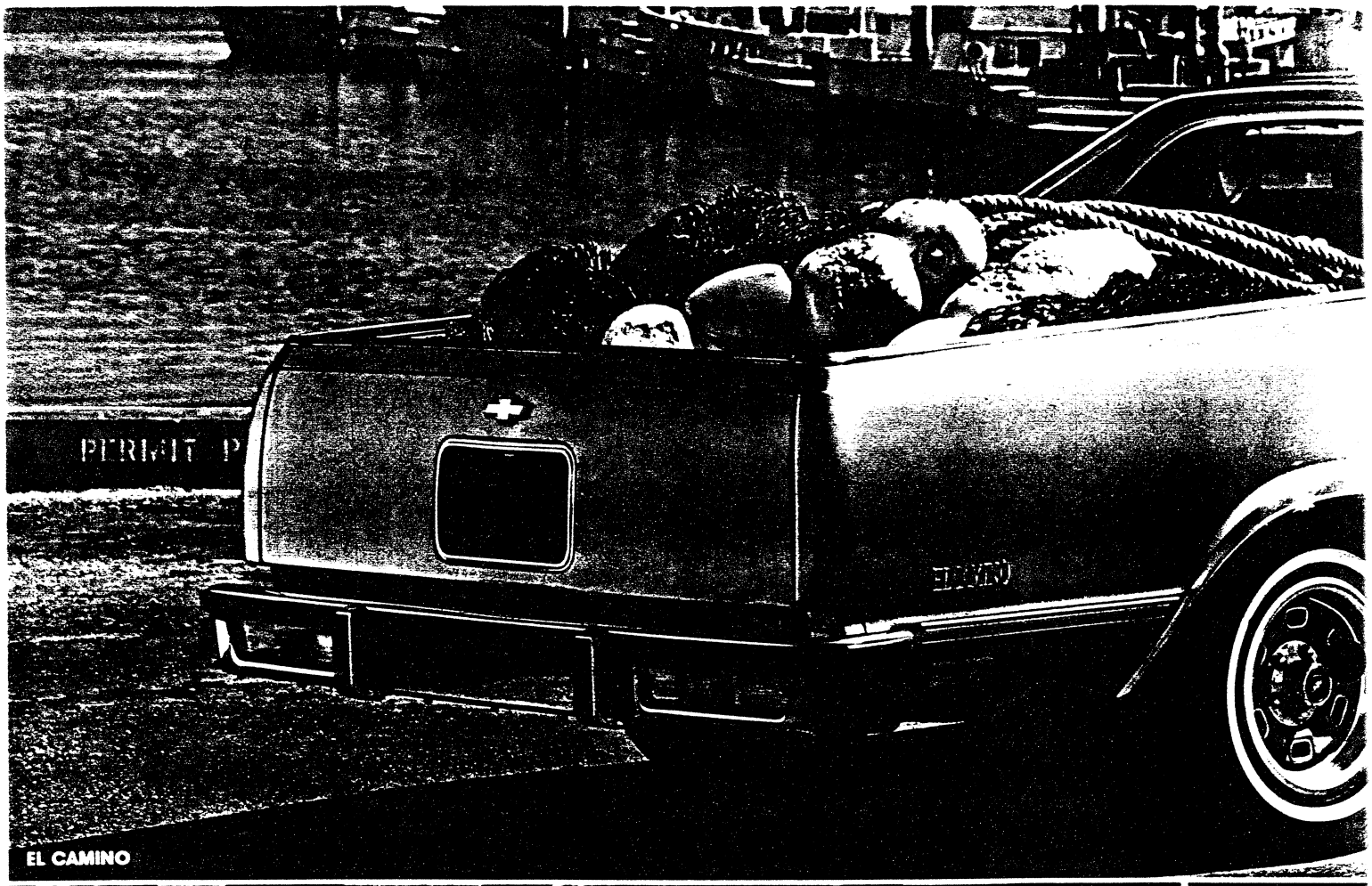

EL CAMINO

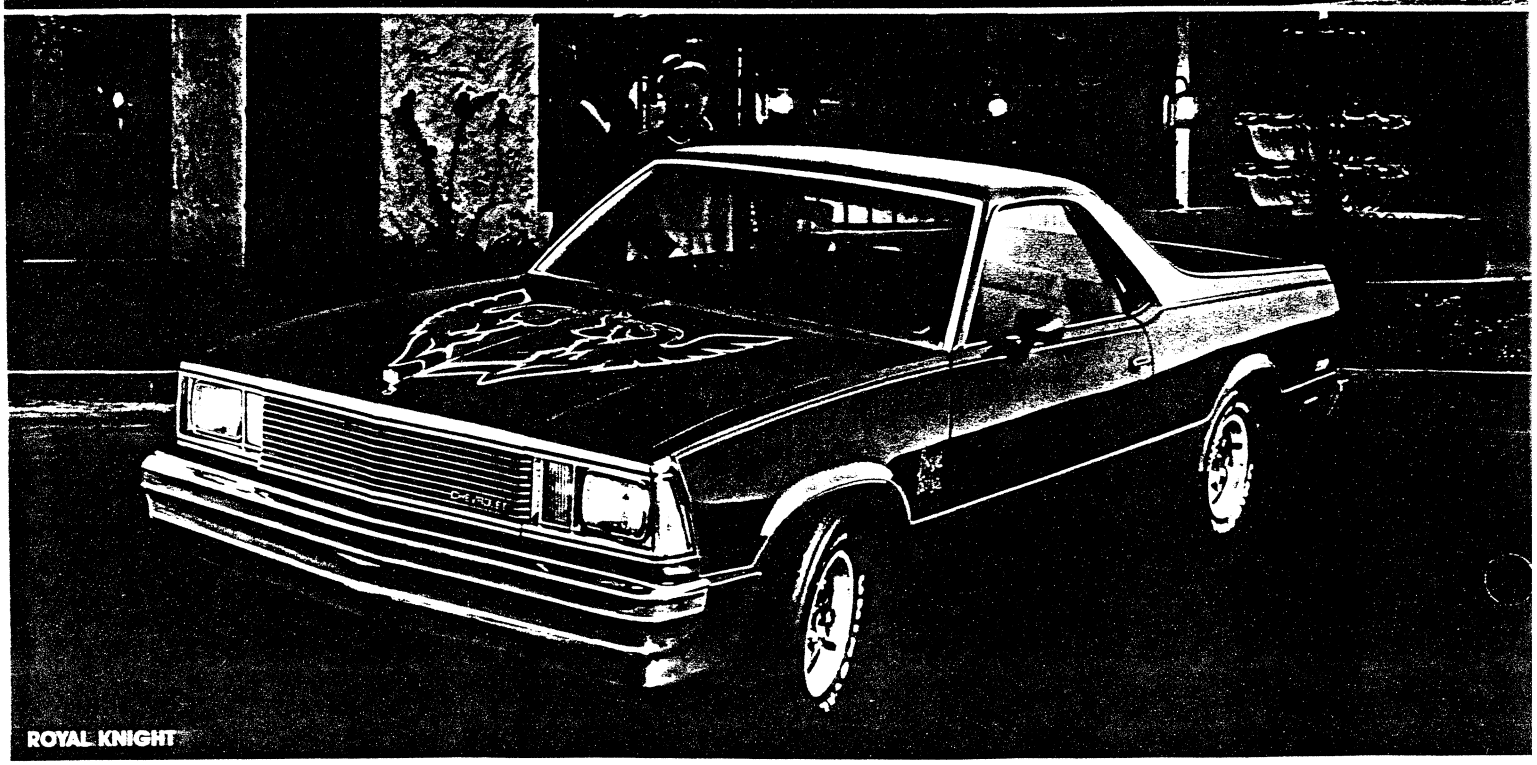

ROYAL KNIGHT

SUPER SPORT. El Camino Super Sport model is a fine blend of most of El Camino's basic value, plus a lot of sporty character. You get a large front air dam, painted sport mirrors, a choice of 8 paint accent colors on the lower body, decal striping, "Super Sport" decal identification on the tailgate and doors and color-keyed Rally wheels. Inside, a newly styled "Super Sport" nameplate graces the dash.

TASTEFULLY REFINED DASH. El Camino's splendid interior has been upgraded this year with a restyled instrument panel pad, a recessed black rectangular applique, new model nameplates and new international symbols on selected controls. The center console with simulated wood-grain accents and hidden storage is optional when bucket seats are ordered.

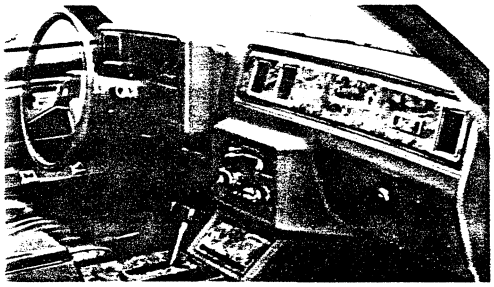

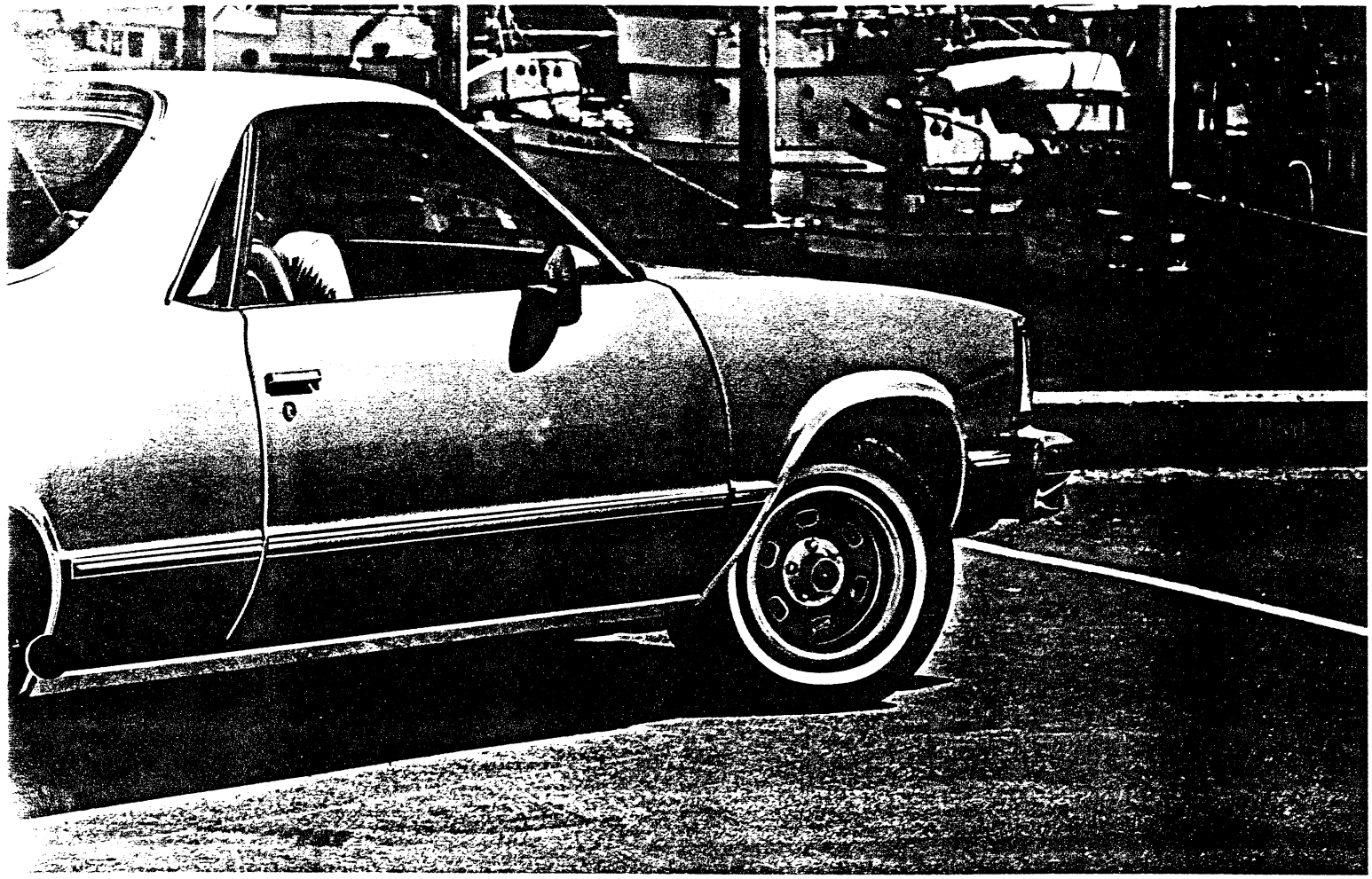

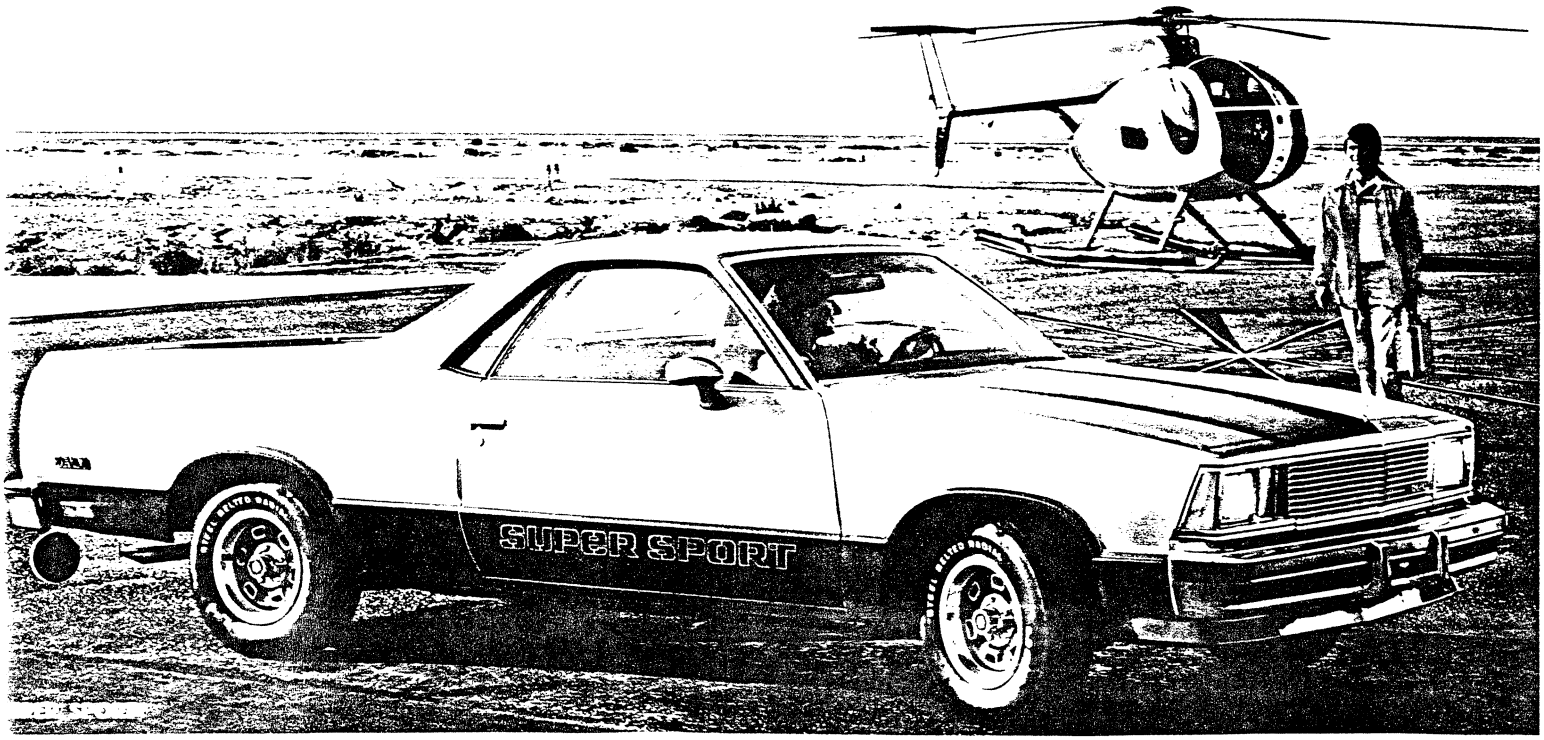

Tires supplied by various manufacturers.

THE COMFORT OF A CAR IN A HARDWORKING TRUCK.

For 1981 Chevy El Camino's interior elegance has been significantly improved. New, convenient pull straps grace the doors; the seats are trimmed with luxurious fabrics. For your comfort and convenience, power steering is a standard feature. There are three types of seating to choose from (each is available in knit cloth or textured vinyl). The standard full foam cushioned bench seat has a handy split back. For even more style, roomy contoured bucket seats are optional (with or without the center console/integral transmission shift lever). Or you may choose El Camino's brand-new 55/45 split seat option (with 45% of the seat area on the driver's side and a single folding arm rest). Whichever you choose—it'll be a pleasure.

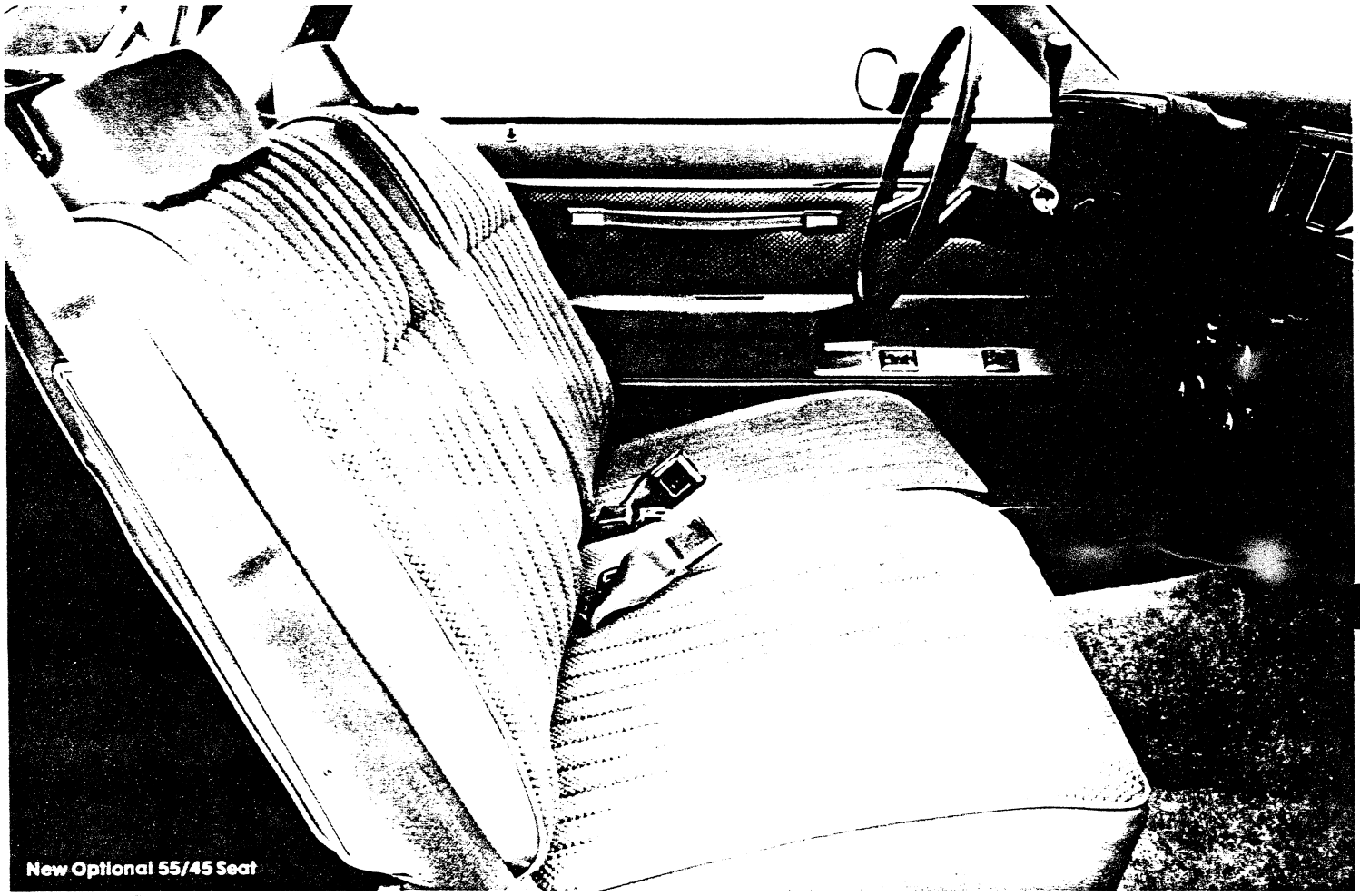

New Optional 55/45 Seat

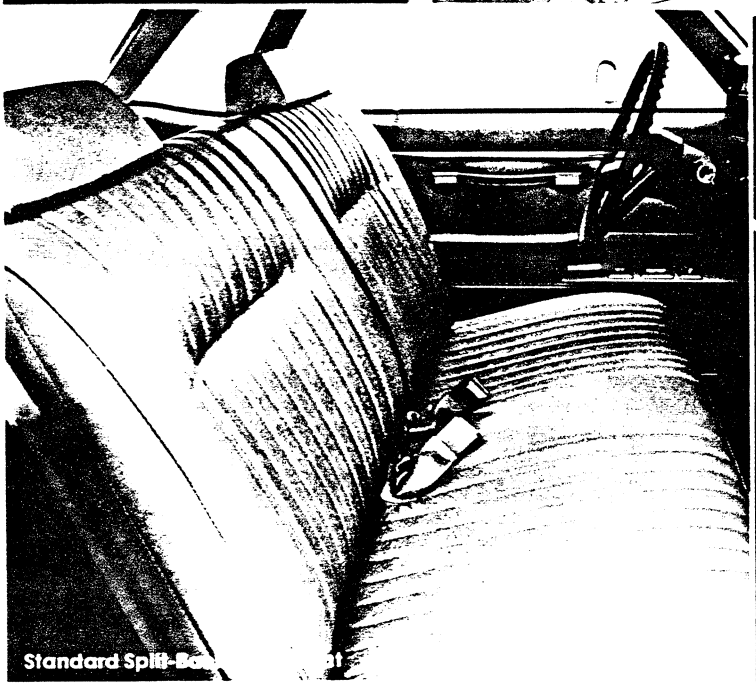

Standard Split-Be[illegible]

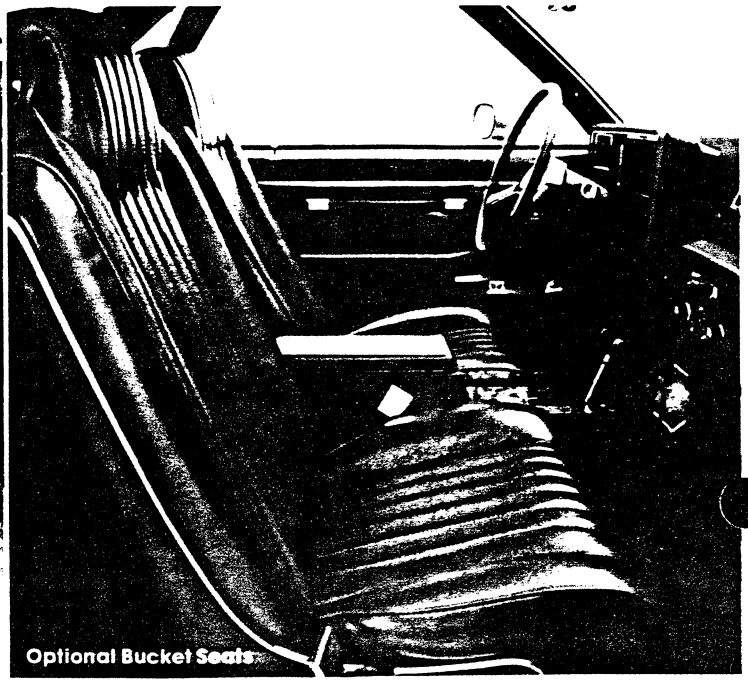

Optional Bucket Seats

FACTS AND FEATURES.

OPTION	AVAILABILITY EL CAMINO	SUPER-SPORT
Air Conditioning	X	X
Battery, Heavy-Duty	X	X
Bumper Equipment: Front & Rear		
Bumper Guards	X	X
Bumper Rub Strips	X	X
Clock, Electric	X	X
Color-keyed Floor Mats	X	X
Console	X	X
Cooling, Heavy-Duty	X	X
Cover, Cargo Box Tonneau	X	X
Cruise Control	X	X
Door Lock System, Power	X	X
Gage Package w. Trip Odometer	X	X
Gage Package w. Tachometer	X	X
Glass, Tinted	X	X
Headlamps, Halogen Hi-Intensity	X	X
Lighting, Auxiliary	X	X
Mirrors		
Outside Rearview, LH Remote	X	
Sport, LH Remote and RH Manual	X	
Sport, Twin Remote	X	X
Moldings		
Deluxe Body Side	X	
Door Edge Guard	X	X
Front Fender, Body Side & Tailgate	X	
Delco Radio Equipment		
AM Radio	X	X
AM-FM Radio	X	X
AM-FM Stereo Radio	X	X
AM-FM Stereo w. 8-Track Tape	X	X
AM-FM Stereo w. Cassette Tape	X	X
CB w. Power Trip and Antenna	X	X
Power Antenna	X	X
Windshield Antenna	X	X
Rails, Cargo Box Side	X	X
Seat, Six-Way Power	X	X
Steering Wheel, Comfortilt	X	X
Suspension, Sport	X	X
Tank, Fuel 22-gal.	X	X
Tie-Downs, Cargo Box	X	X
Wheel Trim		
Sport Wheel Covers	X	X
Luxe Wheel Covers	X	
Rally Wheels	X	
Wheel Cover Locking Package	X	
Windows, Power	X	X
Wipers, Intermittent Windshield	X	X

COLORS.

Most are new for '81.

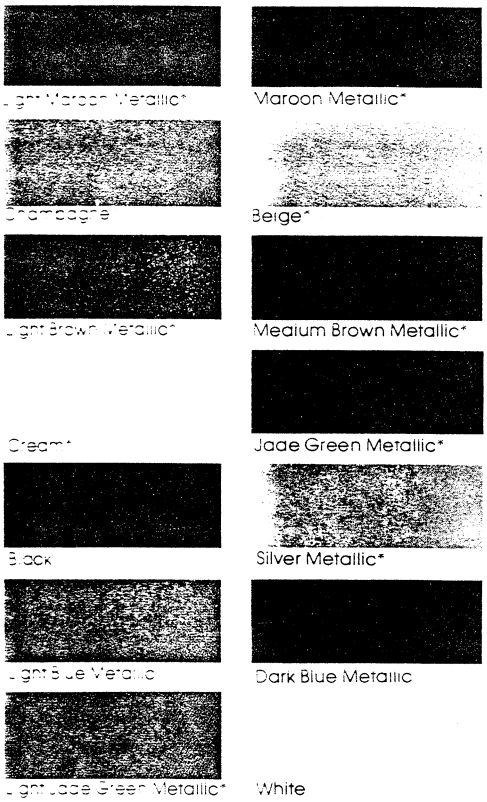

*New color.

POWER TEAMS.

ENGINES WITH LT. DUTY EMISSIONS FOR ALL STATES EXCEPT CALIFORNIA				ENGINES WITH LT. DUTY EMISSIONS FOR CALIFORNIA ONLY	
Displacement—Liter (Cu. In.)	3.8L (229) V6	4.4L (267) V8	5.0L (305) V8	3.8L (231) V6	5.0L (305) V8
Engine Ordering Code	LC3(A)	L39(B)	LG4(B)	LD5(C)	LG4(B)
Bore & Stroke	3.7 x 3.48	3.5 x 3.48	3.7 x 3.48	3.8 x 3.4	3.7 x 3.48
Compression Ratio	8.6 to 1	8.3 to 1	8.6 to 1	8.0 to 1	8.6 to 1
SAE Net Horsepower @ rpm	110 @ 4200	115 @ 4000	145 @ 3800	110 @ 3800	145 @ 3800
SAE Net Torque (lb.-ft.) @ rpm	170 @ 2000	200 @ 2400	248 @ 2400	190 @ 1600	248 @ 2400

OPTIONAL V6 OR V8 ENGINE REQUIRED FOR REGISTRATION IN THE STATE OF CALIFORNIA. (A) Produced by GM-Chevrolet Motor Division. (B) Produced by GM-Chevrolet Motor Division and GM of Canada. (C) Produced by GM-Buick Motor Division.

A WORD ABOUT ASSEMBLY, COMPONENTS AND OPTIONAL EQUIPMENT IN THESE CHEVROLET PRODUCTS.

The Chevy El Caminos described in this brochure are assembled at facilities of General Motors Corporation operated by GM Assembly Division.

These Chevys incorporate thousands of different components produced by various divisions of General Motors and by various suppliers to General Motors. From time to time during the manufacturing process, it may be necessary, in order to meet public demand for particular vehicles or equipment, or to meet federally mandated emissions, safety and fuel economy requirements, or for other reasons, to produce these products with different components or differently sourced components than initially scheduled. All such components have been approved for use in these Chevrolet products and will provide the quality performance associated with the Chevrolet name.

With respect to factory-installed extra cost optional equipment, make certain you specify the type of equipment you desire on your vehicle when ordering it from your dealer.

Some options may be unavailable when your vehicle is built. Your dealer receives advice regarding current availability of options. You may ask your dealer for this information. GM also requests the dealer to advise you if an option you ordered is unavailable. We suggest that you verify that your vehicle includes the optional equipment you ordered or, if there are changes, that they are acceptable to you.

This vehicle is also available from GMC dealers under the name GMC Caballero.

THE CHOICE IS YOURS.

El Camino offers a long list of options that can add to your enjoyment, comfort and convenience. New halogen high-intensity headlamps. Cruise Control with a handy new "resume speed" feature, plus a new trip odometer, make the optional gage packages more complete. See Options Chart on page 9 and your Chevrolet dealer for details on the availability of options.

The GM Continuous Protection Plan. It offers service protection in addition to that provided by GM's new vehicle limited warranty. Available only in the U.S. and Canada for the 1981 model year. Ask your dealer about it.

CHEVY TRUCKS

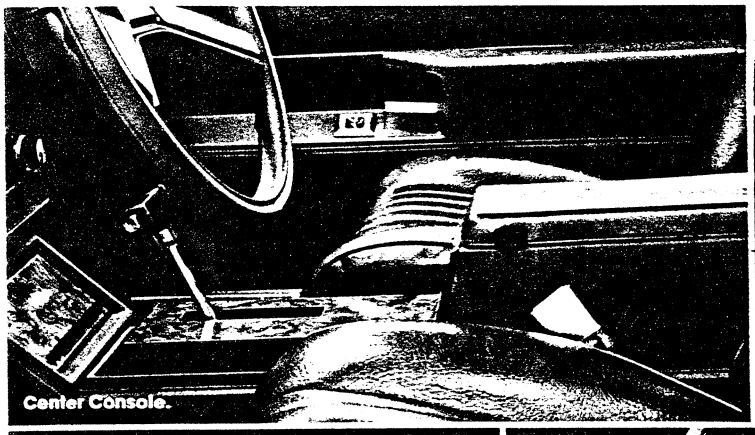
Center Console.

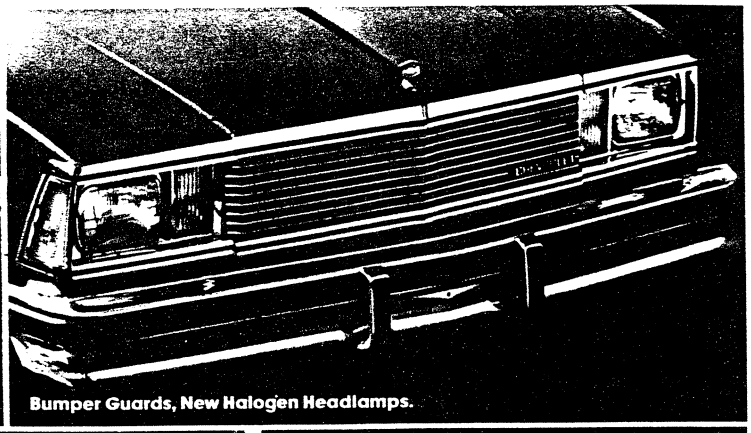
Bumper Guards, New Halogen Headlamps.


Sport Wheel Covers.

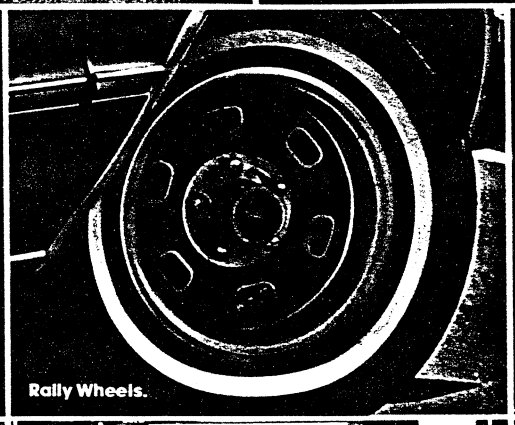
Rally Wheels.


Comfortilt Steering Wheel.


Air Conditioning.


Radio.

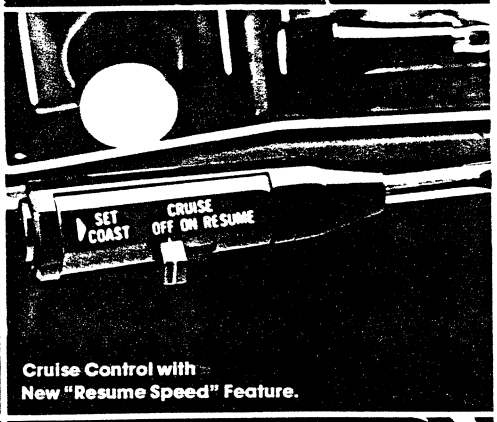

Cruise Control with New "Resume Speed" Feature.

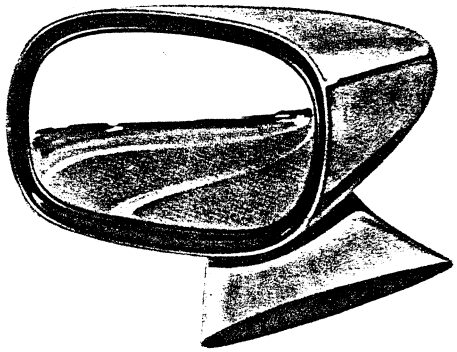
Dual Sport Mirrors.

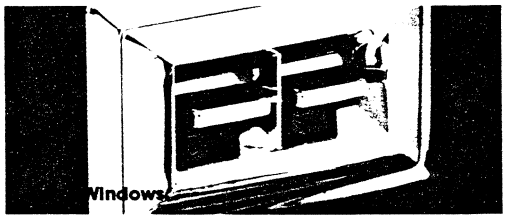
Windows.

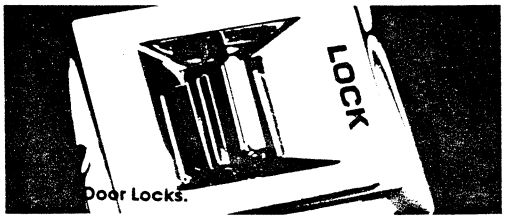

Door Locks.

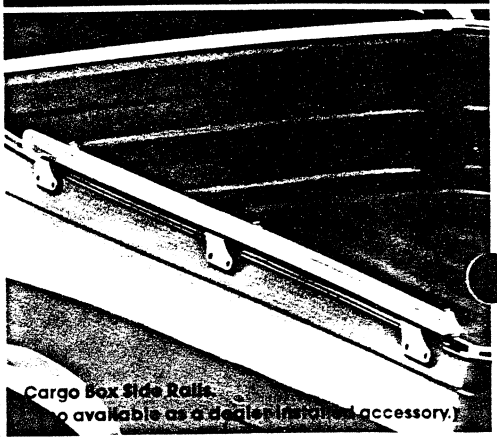
Cargo Box Side Rails.
available as a dealer installed accessory.

July, 1980 Litho in U.S.A.

Specifications Form Passenger Car

1981

METRIC (U.S. Customary)

Manufacturer	Car Line	
CHEVROLET MOTOR DIVISION GENERAL MOTORS CORPORATION	MALIBU-MALIBU CLASSIC-EL CAMINO	
Mailing Address CHEVROLET ENGINEERING CENTER 30003 VAN DYKE WARREN, MICHIGAN 48090	Model Year 1981	Issued: SEPTEMBER,1980 Revised (•)

MVMA Specifications Form
Passenger Car
METRIC (U.S. Customary)

Table of Contents

1	Car Models
2	Power Teams
3-7	Engine
7	Exhaust System
8	Fuel System
9	Cooling System
10, 11	Vehicle Emission Control
12-14	Electrical
15-17	Drive Units
18	Tires and Wheels
18, 19	Brakes
20	Steering
21	Suspension — Front and Rear
22	Body — Miscellaneous Information
22	Frame
23	Convenience Equipment
24	Vehicle Mass (Weight)
25	Optional Equipment Mass (Weight)
26-30	Car and Body Dimensions — including Fiducial Marks, Glass, Lamps and Headlamp Shape
31-35	Car and Body Dimension Key Sheets
36	Index

NOTE:

1. This form uses both SI metric units and U.S. Customary units. The Metric unit of measurement is presented first, and the U.S. Customary unit follows in parentheses.
2. UNLESS OTHERWISE INDICATED:
   a. Specifications apply to standard models without optional equipment. Significant deviations are noted.
   b. Nominal design dimensions are used throughout these specifications.
   c. All linear dimensions are in millimeters (inches), and all mass (weight) specifications are in kilograms (pounds).
3. The General Specifications herein are those in effect at date of completion and are subject to change without notice by the manufacturer.
4. A printed or computer tape supplement containing additional Car and Body Dimensions and/or drawings (based in part on SAE J1100a "Motor Vehicle Dimensions") may be available from the manufacturer.

MVMA Specifications Form
Passenger Car
METRIC (U.S. Customary)

Car Line MALIBU - MALIBU CLASSIC - EL CAMINO

Model Year 1981 Issued 9-80 Revised (*)

Car Models

Model Description (Include Line Drawings of Vehicles, if Desired)	Make, Car line, Series, Body Type (Mfgr's Model Code)	No. of Designated Seating Positions (Front/Rear)		Max. Trunk/Cargo Load — Kilograms (Pounds)
MALIBU	MODEL NUMBER	FRONT	REAR	
2-Door Coupe	1AT27	3	3	
4-Door Sedan	1AT69	3	3	
4-Door Station Wagon, 2-Seat	1AT35	3	3	
MALIBU CLASSIC				
2-Door Coupe	1AW27	3	3	
4-Door Sedan	1AW69	3	3	
4-Door Station Wagon, 2-Seat	1AW35	3	3	
EL CAMINO				
2-Door Sedan Pick-up	1AW80	3	-	

NOTE: Any specifications on the following pages that are specific to California requirements are indicated accordingly.

MVMA Specifications Form
Passenger Car
METRIC (U.S. Customary)

Car Line MALIBU - MALIBU CLASSIC - EL CAMINO
Model Year 1981 Issued 9-80 Revised (•)

Power Teams (Indicate whether standard or optional)

SAE Net bhp (brake horsepower) and net torque corrected to 85° F and 29.38 in. Hg atmospheric pressure.

SERIES (b) AVAILABILITY	ENGINE						TRANSMISSION	AXLE RATIO (c) (Std. first) (Indicate A/C ratio)	
	Displ. liters (in³)	Carb. (Barrels)	Compr. Ratio	SAE Net at RPM kW (bhp)	SAE Net at RPM Torque N·m (lb. ft.)	Exhaust System*		Base	Opt.
Base-All Exc. Calif. Sed. & Cpe.	V-6 3.8 (229) (RPO LC3)	2	8.6:1	110 @ 4200	170 @ 2000	S	Man. 3-Spd (3.50 low) - Base	2.73:1	--
							Auto '250c'-Avail (Auto '350c' -Avail	@ 2.41:1	--
Wagon & El Camino							Man. 3-Spd (3.50 low) - Base	2.73:1	--
							Auto '250c'-Avail (Auto '350c' -Avail	@ 2.73:1	--
Base-Calif. Only Sed. & Cpe	V-6 3.8 (231) (LD5)	2	8.0:1	110 @ 3800	190 @ 1600	S	Auto '350c'-Avail	2.41:1	--
Wagon & El Camino							Auto '200c'-Avail (Auto '250c'-Avail	@ 2.73:1	--
Avail-All Exc. Calif. Sed & Cpe.	V-8 4.4 (267) (L39)	2	8.3:1	115 @ 4000	200 @ 2400	S	Auto '350c'-Avail (Auto '250c'-Avail	@ 2.29:1	--
Wagon & El Camino							Auto '350c'-Avail (Auto '200c'-Avail	@ 2.56:1	--
Avail - All Exc. Calif. Wagon & El Camino	V-8 5.0 (305) (LG4)	4	8.6:1	150 @ 3800	240 @ 2400	S	Auto '200c'-Avail (Auto '250c'-Avail	(@) 2.41:1	--
							Auto '350c'-Avail	--	2.73:1
							Man. 4-Spd (2.85 low) - Avail.	3.08:1	--
							Auto '200c'-Avail (Auto '250c'-Avail	@ 2.41:1	--
Avail-Calif. Only Sed. & Cpe.							Auto '350c'-Avail.	--	2.73:1
							Auto '250c'-Avail. (Auto '200c'-Avail	@ 2.29:1	--
Wagon & El Camino							Auto '350c'-Avail.	--	2.73:1
							Auto '250c'-Avail. (Auto '200c'-Avail	@ 2.41:1	--
							Auto '350c'-Avail.	--	2.73:1

@ - Manufacturing option

(b) - 'Base' and 'Available' refer to engine availability

(c) - Limited slip diff & A/C available with all axle ratios.

*S — Single D — Dual

MVMA Specifications Form
Passenger Car
METRIC (U.S. Customary)

Car Line MALIBU - MALIBU CLASSIC - EL CAMINO

Model Year 1981 Issued 9-80 Revised (•)

Engine Description/Carb. Engine Code	3.8 Liter V6(229 CID) 2-Bbl Carburetor RPO LC3	4.4 Liter (267 CID) 2-Bbl Carburetor RPO L39	5.0 Liter V8(305 CID) 4-Bbl Carburetor RPO LG4

Engine — General

Type (inline, V and Angle, Flat)		90° 'V'		
Location (Front, Mid, Rear)		Front		
Engine installation position (transverse, longitudinal)		Longitudinal		
Number of mtg. points	Front	Two		
	Rear	One		
No. of cylinders		6	8	
Bore		95 (3.736)	88.9 (3.50)	95 (3.736)
Stroke		88.4 (3.48)		
Piston Displacement cm^3 (in^3)		3753 (229)	4375 (267)	4998 (305)
Bore Spacing (C/L to C/L)		111.8 (4.40)		
Cylinder Block Material		Cast Alloy Iron		
Cylinder block deck height		229.2 (9.025)		229.4 (9.03)
Deck clearance (minimum) (above or below block)		.025 Below		
Cylinder Head Material		Cast Alloy Iron		
Cylinder Head Volume — cm^3		58.9	51.8	58.9
Head Gasket Thickness (Compressed)		.021		
Head Gasket Volume — cm^3		3.98	3.61	3.98
Minimum Combustion Chamber Volume — cm^3		56.7	49.6	56.7
Cyl. No. system (front to rear)**	L Bank	1-3-5	1-3-5-7	
	R. Bank	2-4-6	2-4-6-8	
Firing Order		1-6-5-4-3-2	1-8-4-3-6-5-7-2	
Recommended fuel (Leaded, unleaded)		Unleaded		
Fuel antiknock index $\frac{(R + M)}{2}$		87		
Total dressed engine mass (wt) dry *		205.6 (453.2)	253.5 (559)	274.3 (605)

Engine — Pistons

Material			Cast Aluminum Alloy		
Description and finish (Flat, dished, dome, etc.)			Closed skirt, sump head		
Mass, g (weight, oz.) — Piston Only			502 (17.71)	444 (15.66)	508 (17.92)
Clearance (limits)	Top land		.622-.851 (.0245-.0335)		
	Skirt	Top	.017-.107 (.0007-.0042)		
		Bottom			
Ring groove diameter	No. 1 ring		84.33-84.71 (3.320-3.335)		
	No. 2 ring		84.33-84.71 (3.320-3.335)		
	No. 3. ring		83.82-84.20 (3.300-3.315)		

*Dressed engine mass (weight) includes the following: Front of engine fan to rear of engine block - includes engine mounts and accelerator controls.

** Rear of engine — drive takeoff.
View from drive takeoff end to determine left & right side of engine.

MVMA Specifications Form
Passenger Car
METRIC (U.S. Customary)

Car Line: MALIBU - MALIBU CLASSIC - EL CAMINO
Model Year: 1981 Issued: 9-80 Revised (•)

Engine Description/Carb. Engine Code	3.8 Liter V-6 (231 CID) 2-Bbl Carburetor RPO LD5

Engine — General

Type (Inline, V and Angle, Flat)		90° 'V'
Location (Front, Mid, Rear)		Front
Engine installation position (transverse, longitudinal)		Longitudinal
Number of mtg. points	Front	Two
	Rear	One
No. of cylinders		6
Bore		96.5 (3.80)
Stroke		86.4 (3.40)
Piston Displacement cm^3 (in^3)		3785 (231)
Bore Spacing (C/L to C/L)		107.7 (4.24)
Cylinder Block Material		Cast Alloy Iron
Cylinder block deck height		242.8 (9.56)
Deck clearance (minimum) (above or below block)		1.91 Below
Cylinder Head Material		Cast Alloy Iron
Cylinder Head Volume — cm^3		48.19
Head Gasket Thickness (Compressed)		.533
Head Gasket Volume — cm^3		3.93
Minimum Combustion Chamber Volume — cm^3		87.65
Cyl. No. system (front to rear)**	L Bank	1-3-5
	R. Bank	2-4-6
Firing Order		1-6-5-4-3-2
Recommended fuel (Leaded, unleaded)		Unleaded
Fuel antiknock index $\frac{(R + M)}{2}$		87
Total dressed engine mass (wt) dry *		207.3 (457)

Engine — Pistons

Material			Cast Aluminum Alloy
Description and finish (Flat, dished, dome, etc.)			Full skirt with transverse slot, dished head
Mass, g (weight, oz.) — Piston Only			508 (17.92)
Clearance (limits)	Top land		1.19-1.32 (.047-.052)
	Skirt	Top	.03-.06 (.0011-.0023)
		Bottom	.04-.10 (.0016-.0038)
Ring groove diameter	No. 1 ring		86.10-85.73 (3.390-3.375)
	No. 2 ring		86.10-85.73 (3.390-3.375)
	No. 3 ring		86.26-85.93 (3.396-3.383)

*Dressed engine mass (weight) includes the following:

** Rear of engine — drive takeoff.
View from drive takeoff end to determine left & right side of engine.

MVMA Specifications Form
Passenger Car
METRIC (U.S. Customary)

Car Line: MALIBU - MALIBU CLASSIC - EL CAMINO
Model Year: 1981 Issued: 9-80 Revised (•):

Engine Description/Carb. Engine Code	3.8 Liter V6(229 CID) 2-Bbl Carburetor	4.4 Liter V8(267 CID) 2-Bbl Carburetor	5.0 Liter V8(305 CID) 4-Bbl Carburetor
	RPO LC3	RPO L39	RPO LG4

Engine — Piston Rings

Function (top to bottom)	No. 1, oil or comp	Compression	
	No. 2, oil or comp.	Compression	
	No. 3, oil or comp.	Oil	
Compression	Description — Material, coating, etc. Upper	(A)	Cast alloy iron, radius-face, chrome flash
	Lower	(B)	Cast alloy iron, reverse twist, tapered face lubrited
	Width	1.96-1.98 (.0770-.0780)	
	Gap Upper	0.25-0.51 (.010-.020) (C)	
Oil	Description — material, coating, etc	TRW 'T' flex design, .002" minimum chrome	
	Width	4.52-4.62 (.178-.182)	
	Gap	0.25-0.89 (.010-.035)	
Expanders		In oil ring assembly	

Engine — Piston Pins

Material		SAE - 1018	
Length		75.95-76.45 (2.990-3.010)	
Diameter		23.546-23.553 (.9270-.9273)	
Type	Locked in rod, in piston, floating, etc	Locked in rod	
	Bushing: In rod or piston	---	
	Bushing: Material	---	
Clearance	In piston	.0013-.0075 (.00005-.00030)	.0063-.0089(.00025-.00035)
	In rod		
Direction & amount offset in piston		Major thrust side - 1.52 (.060)	

Engine — Connecting Rods

Material		1037 or 1038 steel	
Mass, g (weight, oz.)		388 (13.69)	
Length (center to center)		144.8 (5.70)	
Bearing	Material & Type	Premium aluminum	
	Overall length	16.97 (.668)	20.24 (.797)
	Clearance (limits)	.025-.063(.0010-.0025)	.033-.089 (.0013-.0035)
	End Play	.15-.38 (.006-.015)	.15-.41 (.006-.016)

(A) Molybdenum filled channel, barrel face.
(B) Inside bevel, reverse tapered face, phosphate coated.
(C) Lower - 3.8 & 4.4 liter - 0.25-0.64 (.010-.025); 5.0 liter - 0.33-0.63 (.013-.025).

MVMA Specifications Form
Passenger Car
METRIC (U.S. Customary)

Car Line MALIBU - MALIBU CLASSIC - EL CAMINO
Model Year 1981 Issued 9-80 Revised (•)

Engine Description/Carb. Engine Code	3.8 Liter V-6 (231 CID) 2-Bbl Carburetor RPO LD5

Engine — Piston Rings

Function (top to bottom)	No. 1, oil or comp.	Compression
	No. 2, oil or comp.	Compression
	No. 3, oil or comp.	Oil
Compression	Description — Material, coating, etc. Upper	(A)
	Lower	(A)
	Width	1.956-1.981 (.0770-.0780)
	Gap	0.25-0.51 (.010-.020)
Oil	Description — material, coating, etc.	Multi-piece, (2) rails & (1) expander Stainless steel - 50
	Width	.597-.622 (.0235-.0245)
	Gap	0.38-1.40 (.015-.055)
Expanders		Abuttment type

Engine — Piston Pins

Material			SAE-1018
Length			73.66 (2.90)
Diameter			23.853-23.860 (.9391-.9394)
Type	Locked in rod, in piston, floating, etc.		Pressed in rod
	Bushing	In rod or piston	---
		Material	---
Clearance	In piston		.008-.023 (.0003-.0009)
	In rod		.018-.043 (.0007-.0017)
Direction & amount offset in piston			Major thrust side - .102 (.040)

Engine — Connecting Rods

Material		Cast Arma Steel
Mass, g (weight, oz.)		454 (16.01)
Length (center to center)		151.4 (5.96)
Bearing	Material & Type	Premium aluminum
	Overall length	16.61 (.654)
	Clearance (limits)	.013-.066 (.0005-.0026)
	End Play	.15-.58 (.006-.023)

(A) Upper - Molybdenum filled channel, barrel face.
Lower - Inside bevel, reverse tapered face, phosphate coated.

MVMA Specifications Form
Passenger Car
METRIC (U.S. Customary)

Car Line: MALIBU - MALIBU CLASSIC - EL CAMINO
Model Year: 1981 Issued: 9-80 Revised (•):

Engine Description/Carb. Engine Code	3.8 Liter V6(229 CID) 2-Bbl Carburetor	4.4 Liter V8(267 CID) 2-Bbl Carburetor	5.0 Liter V8(305 CID) 4-Bbl Carburetor
	RPO LC3	RPO L39	RPO LG4

Engine — Crankshaft

Material			Nodular cast iron	
Vibration damper type			Rubber mounted inertia	
End thrust taken by bearing (No.)			4	5
Crankshaft end play			.051-.152(.002-.006)	.051-.178 (.002-.007)
Main bearing	Material & type		#1-G66 Conecc; #2-4 - M400	#1-G66 Conecc; #2,3,4-M400; #5 upper - M100; #5 lower w/AT-M400, W/MT-M100
	Clearance		(A)	
	Journal dia. and bearing overall length	No. 1	62.202 x 20.37 (2.4489 x .802)	
		No. 2	62.194 x 20.37 (2.4486 x .802)	
		No. 3	62.194 x 20.37 (2.4486 x .802)	
		No. 4	62.189 x 38.94	62.194 x 20.37 (2.4486 x .802)
		No. 5	---	62.189 x 38.94 (2.4484 x 1.533)
		No. 6	---	
		No. 7	---	
	Dir. & amt. cyl. offset			
	No. bolts/main brg. cap		2	
Crankpin journal diameter			53.284-53.335 (2.0978-2.0998)	53.31-53.34 (2.099-2.100)

Engine — Camshaft

Location			In block above crankshaft	
Material			Cast alloy iron	
Bearings	Material		Steel backed babbitt	
	Number		4	5
Type of Drive	Gear, chain or belt		Chain	
	Crankshaft gear or sprocket material		Steel	Sintered iron
	Camshaft gear or sprocket material		Cast iron	Aluminum nylon
	Timing chain	No. of links	46	
	Chain or Belt	Width	15.87 (.625)	
		Pitch	12.7 (.500)	

(A) Front - .020 - .051 (.0008 - .0020)
Intermediate - .028 - .058 (.0011 - .0023)
Rear - .043 - .081 (.0017 - .0032)

MVMA Specifications Form
Passenger Car
METRIC (U.S. Customary)

Car Line MALIBU - MALIBU CLASSIC - EL CAMINO
Model Year 1981 Issued 9-80 Revised (•)

Engine Description/Carb. Engine Code	3.8 Liter V-6 (231 CID) 2-Bbl Carburetor RPO LD5

Engine — Crankshaft

Material			Nodular cast iron
Vibration damper type			Rubber mounted inertia
End thrust taken by bearing (No.)			2
Crankshaft end play			.08-.28 (.003-.011)
Main bearing	Material & type		#1 Upper - M400 Conecc; #1 Lower - M100 Conecc; #2,3 - M400; #4 - M100
	Clearance		.010-.040 (.0004-.0017)
	Journal dia. and bearing overall length	No. 1	63.39 x 21.95 (2.4955 x .864)
		No. 2	63.39 x 26.85 (2.4955 x 1.057)
		No. 3	63.39 x 21.95 (2.4955 x .864)
		No. 4	63.39 x 21.95 (2.4955 x .864)
		No. 5	---
		No. 6	---
		No. 7	---
	Dir. & amt. cyl. offset		
	No. bolts/main brg. cap		2
Crankpin journal diameter			57.12-57.14 (2.249-2.250)

Engine — Camshaft

Location			In block above crankshaft
Material			Cast alloy iron
Bearings	Material		Steel backed babbitt
	Number		4
Type of Drive	Gear, chain or belt		Chain
	Crankshaft gear or sprocket material		Sintered iron
	Camshaft gear or sprocket material		Aluminum nylon
	Timing chain	No. of links	54
	Chain or Belt	Width	22.23 (.875)
		Pitch	9.53 (.375)

MVMA Specifications Form
Passenger Car
METRIC (U.S. Customary)

Car Line MALIBU - MALIBU CLASSIC - EL CAMINO

Model Year 1981 Issued 9-80 Revised (•)

Engine Description/Carb.	3.8 Liter V6(229 CID) 2-Bbl Carburetor	4.4 Liter V8(267 CID) 2-Bbl Carburetor	5.0 Liter V8(305 CID) 4-Bbl Carburetor
Engine Code	RPO LC3	RPO L39	RPO LG4

Engine — Valve System

Hydraulic lifters (Std., opt., NA)			Standard		
Valve rotator, type (intake, exhaust)			Exhaust		
Push rods (dia., length, material)			7.9 x 196.2 (.3125 x 7.724) welded steel tubing		
Rocker ratio			1.50:1		
Operating tappet clearance (indicate hot or cold)	Intake		Zero		
	Exhaust		Zero		
Timing (based on top of ramp points)	Intake	Opens (°BTC)	42	44	
		Closes (°ABC)	78	76	
		Duration (deg.)	300	300	
	Exhaust	Opens (°BBC)	78	78	
		Closes (°ATC)	52	52	
		Duration (deg.)	310	310	
	Valve open overlap (deg.)		94	96	
Intake Valve	Material		SAE-1541 or 1547 (a)	SAE-1541-H steel (a)	21-2N steel (c)
	Overall length		124.52-125.03 (4.9024-4.9224)		
	Actual overall head dia.		46.7 (1.84)	43.7 (1.72)	46.7 (1.84)
	Angle of seat & face (deg.)		46,45		
	Seat insert material		None		
	Stem diameter		8.661-8.679 (.3410-.3417)		
	Stem to guide clearance		.025-.069 (.0010-.0027)		
	Lift (at zero lash)		9.47 (.373)	9.07 (.357)	
	Outer Spring press. & length	Valve closed — N at mm (lb. at in.)	338-374 @ 43.2 (76-84 @ 1.70)		
		Valve open — N at mm (lb. at in.)	778 @ 31.7 (175 @ 1.25)		
	Inner spring press. & length	Valve closed — N at mm (lb. at in.)	Spring Damper		
		Valve open — N at mm (lb. at in.)	Spring Damper		
Exhaust Valve	Material		21-2N steel, chrome flash stem		
	Overall length		124.71-125.02 (4.910-4.930)		
	Actual overall head dia.		38.1 (1.50)	35.1 (1.38)	38.1 (1.50)
	Angle of seat & face (deg.)		46, 45		
	Seat insert material		None		
	Stem diameter		8.661-8.679 (.3410-.3417)		
	Stem to guide clearance		.025-.069 (.0010-.0027)		
	Lift (at zero lash)		10.41 (.4100)	9.91 (.3900)	
	Outer spring press. & length	Valve closed — N at mm (lb. at in.)	338-374 @ 43.2 (76-84 @ 1.70)		
		Valve open — N at mm (lb. at in.)	845 @ 31.7 (190 @ 1.25)	818 @ 31.7 (184 @ 1.25)	
	Inner spring press. & length	Valve closed — N at mm (lb. at in.)	Spring damper		
		Valve open — N at mm (lb. at in.)			

(a) Chrome flash stem.
(c) Full chrome.

MVMA Specifications Form
Passenger Car
METRIC (U.S. Customary)

Car Line: MALIBU - MALIBU CLASSIC - EL CAMINO
Model Year: 1981 Issued: 9-80 Revised (•)

Engine Description/Carb. Engine Code	3.8 Liter V-6 (231 CID) 2-Bbl Carburetor RPO LD5

Engine — Valve System

Hydraulic lifters (Std., opt., NA)			Standard
Valve rotator type (intake, exhaust)			None
Push rods (dia., length, material)			7.94 x 220.9 (.3125 x 7.9) (a)
Rocker ratio			1.50:1
Operating tappet clearance (indicate hot or cold)	Intake		Zero
	Exhaust		Zero
Timing (based on top of ramp points)	Intake	Opens (°BTC)	16
		Closes (°ABC)	63
		Duration (deg.)	259
	Exhaust	Opens (°BBC)	68
		Closes (°ATC)	29
		Duration (deg.)	277
	Valve open overlap (deg.)		45
Intake Valve	Material		1541 steel, chrome flash stem
	Overall length		119.33-120.09 (4.698-4.728)
	Actual overall head dia.		43.43 (1.710)
	Angle of seat & face (deg.)		45
	Seat insert material		None
	Stem diameter		8.64-8.66 (.3402-.3412)
	Stem to guide clearance		.038-.089 (.0015-.0035)
	Lift (at zero lash)		9.09 (.358)
	Outer Spring press. & length	Valve closed — N at mm (lb. at in.)	262-307 @ 43.86 (59-69 @ 1.727)
		Valve open — N at mm (lb. at in.)	774-845 @ 34 (174-190 @ 1.34)
	Inner spring press. & length	Valve closed — N at mm (lb. at in.)	Spring damper
		Valve open — N at mm (lb. at in.)	Spring damper
Exhaust Valve	Material		21-2N, chrome plated stem
	Overall length		119.46-120.22 (4.703-4.733)
	Actual overall head dia.		38.1 (1.50)
	Angle of seat & face (deg.)		45
	Seat insert material		None
	Stem diameter		8.649-8.666 (.3405-.3412)
	Stem to guide clearance		.038-.081 (.0015-.0032)
	Lift (at zero lash)		9.30 (.366)
	Outer spring press. & length	Valve closed — N at mm (lb. at in.)	262-307 @ 43.9 (59-69 @ 1.73)
		Valve open — N at mm (lb. at in.)	774-845 @ 34.0 (174-190 @ 1.34)
	Inner spring press. & length	Valve closed — N at mm (lb. at in.)	Spring damper
		Valve open — N at mm (lb. at in.)	Spring damper

(a) .060" wall steel tubing.

MVMA Specifications Form
Passenger Car
METRIC (U.S. Customary)

Car Line MALIBU - MALIBU CLASSIC - EL CAMINO
Model Year 1981 Issued 9-80 Revised (•)

Engine Description/Carb. Engine Code	3.8 Liter V6(229 CID) 2-Bbl Carburetor RPO LC3	4.4 Liter V8(267 CID) 2-Bbl Carburetor RPO L39	5.0 Liter V8(305 CID) 4-Bbl Carburetor RPO LG4

Engine — Lubrication System

Type of lubrication (splash, pressure, nozzle)	Main bearings	Pressure	
	Connecting rods	Pressure	
	Piston pins	Splash	
	Camshaft bearings	Pressure	
	Tappets	Pressure	
	Timing gear or chain	Splash & nozzle	Centrifugally oiled
	Cylinder walls	Splash	Pressure, jet cross sprayed
Oil pump type		Gear	
Normal oil pressure-kPa(psi) at engine rpm		310 (45)	
Type oil intake (floating, stationary)		Stationary	
Oil filter system (full flow, part. other)		Full flow	
Capacity of c/case, less filter-refill-L(qt.)		3.8 (4.0)	
Oil grade recommended (SAE viscosity and temperature range)			
Minus 6.6°C(20°F)& Above		20W-20, 10W-30, 10W-40, 20W-40, 20W-50	
Minus 17.7°C to +15.5°C (0 to 60°F)		10W, 5W-30, 10W-40, 10W-30	
Minus 6.6°C(20°F)& Below		5W-20, 10W-30	
Engine service reqmt. (SD, SE, etc.)		SF	

Engine — Exhaust System

Type (single, single with cross-over, dual, other)		Single w/crossover		
Muffler No. & Type (reverse flow, straight thru, separate resonator)		One, reverse flow		
Resonator No. & type		None		
Exhaust Pipe	Branch O.D., wall thickness	50.8 (2.0)		
	Main O.D., wall thickness	57.15 (2.25)		
	Material	Laminated stainless steel tubing		
Inter-mediate Pipe	O.D. & wall thickness	57.15 (2.25)	50.8 (2.0)	57.15 (2.25)
	Material	Aluminum coated steel		
Tail Pipe	O.D. & wall thickness	50.8 (2.0)		57.15 (2.25)
	Material	Aluminum coated steel		

MVMA Specifications Form
Passenger Car
METRIC (U.S. Customary)

Car Line: MALIBU - MALIBU CLASSIC - EL CAMINO
Model Year: 1981 Issued: 9-80 Revised (•)

Engine Description/Carb. Engine Code	3.8 Liter V-6 (231 CID) 2-Bbl Carburetor RPO LD5

Engine — Lubrication System

Type of lubrication (splash, pressure, nozzle)	Main bearings	Pressure
	Connecting rods	Pressure
	Piston pins	Splash
	Camshaft bearings	Pressure
	Tappets	Pressure
	Timing gear or chain	Splash & Nozzle
	Cylinder walls	Splash
Oil pump type		Gear
Normal oil pressure-kPa(psi) at engine rpm		310 (45)
Type oil intake (floating, stationary)		Stationary
Oil filter system (full flow, part, other)		Full flow
Capacity of c/case, less filter-refill-L(qt.)		3.8 (4.0)
Oil grade recommended (SAE viscosity and temperature range)		
Minus 6.6°C(20°F)& Above		20W-20, 10W-30, 10W-40, 20W-40, 20W-50
Minus 17.7°C to +15.5°C (0° to 60°F)		10W, 5W-30, 10W-40, 10W-30
Minus 6.6°C(20°F)& Below		5W-20, 10W-30
Engine service reqmt (SD, SE, etc.)		SF

Engine — Exhaust System

Type (single, single with cross-over, dual, other)		Single w/crossover
Muffler No & Type (reverse flow straight thru, separate resonator)		One, reverse flow
Resonator No & type		None
Exhaust Pipe	Branch O.D., wall thickness	
	Main O.D., wall thickness	
	Material	
Intermediate Pipe	O.D. & wall thickness	50.8 (2.0)
	Material	Aluminum coated steel
Tail Pipe	O.D. & wall thickness	50.8 (2.0)
	Material	Aluminum coated steel

MVMA Specifications Form
Passenger Car
METRIC (U.S. Customary)

Car Line MALIBU - MALIBU CLASSIC - EL CAMINO

Model Year 1981 Issued 9-80 Revised (•)

Engine Description/Carb. Engine Code	3.8 Liter V6(229 CID) 2-Bbl Carburetor RPO LC3	4.4 Liter V8(267 CID) 2-Bbl Carburetor RPO L39	5.0 Liter V8(305 CID) 4-Bbl Carburetor RPO LG4

Engine — Fuel System

(See supplemental page for Details of Fuel Injection, Supercharger, Turbocharger, etc. if used)

Induction type: Carburetor, fuel injection system, etc.			Carburetor		
Fuel Tank	Refill capacity — L (U.S. gals.)		68.5(18.1)-Sed&Cpe;68.9(18.2)-S.W.;67.0(17.7)El Camino (A)		
	Filler location		Rear-Sed & Cpe;LR quarter panel - S.W. & El Camino		
Fuel Pump	Type (elec. or mech.)		Mechanical		
	Locations on engine		Lower right front		
	Pressure range — kPa (psi)		31-41(4.5-6.0)	52-62(7.5-9.0)	
Fuel Filter	Type		Fine mesh plastic strainer in gasoline tank & paper		
	Locations		filter element in carburetor inlet		
Carburetor	Choke type		Electric		
	Intake manifold heat control (exhaust or water)		Exhaust		
	Air cleaner type	Standard	Replaceable paper & charcoal element, single snorkel		
		Optional			
	Idle spd.-rpm (spec. neutral or drive)	Manual	700	--	
		Propane (Neu.)			
		Automatic	600	500	500
		Propane (Neu.)			
	Idle A/F mix.				

(A) 83.3 (22.0) optional for El Camino.

Carburetor Supplementary Information

Model Usage	Engine Displ. — L (in.^{3})	Transmission	Carburetors Make	Carburetors Model	No. Used and Type (Barrels)	Barrel Size
ALL	3.8 (229)	Manual Automatic	Rochester	17081131 17081130	1-2-bbl	Pri-35.1(1.38) Sec-35.1(1.38)
	4.4 (267)	Automatic		17081138	1-2-bbl	Pri-35.1(1.38) Sec-35.1(1.38)
	5.0 (305)	Automatic		17081202	1-4-bbl	Pri-35.1(1.38) Sec-57.2(2.25)

Engine — Diesel Information

Glow plug		
Injector nozzle	Type	
	Opening pressure—kPa, (psi)	
Pre-Chamber design		
Fuel injection pump	Manufacturer	
	Type	
Supplementary vacuum source (type)		

MVMA Specifications Form
Passenger Car
METRIC (U.S. Customary)

Car Line: MALIBU - MALIBU CLASSIC - EL CAMINO
Model Year: 1981 Issued: 9-80 Revised (•)

Engine Description/Carb.	3.8 Liter V-6 (231 CID) 2-Bbl Carburetor
Engine Code	RPO LD5

Engine — Fuel System

(See supplemental page for Details of Fuel Injection, Supercharger, Turbocharger, etc. if used)

Induction type: Carburetor, fuel injection system, etc.			Carburetor
Fuel Tank	Refill capacity — L (U.S. gals.)		68.5(18.1)-Sed&Cpe;68.9(18.2)-S.W.;67.0(17.7) El Camino (A)
	Filler location		Center rear-Sed&Cpe; LR qtr. panel-S.W. & El Camino
Fuel Pump	Type (elec. or mech.)		Mechanical
	Locations on engine		Lower LF
	Pressure range — kPa (psi)		29-40(4.25-5.75)
Fuel Filter	Type		Fine mesh plastic strainer in gasoline tank & paper
	Locations		filter element in carburetor inlet
Carburetor	Choke type		Electric
	Intake manifold heat control (exhaust or water)		Exhaust
	Air cleaner type	Standard	Replaceable paper & charcoal element, single snorkel
		Optional	
	Idle spd. rpm (spec. neutral or drive)	Manual	
		Propane (Neu.)	
		Automatic	500
		Propane (Neu.)	
	Idle A/F mix		

(A) 83.3 (22.0) optional for El Camino.

Carburetor Supplementary Information

Model Usage	Engine Displ — L (in 3)	Transmission	Carburetors Make	Carburetors Model	No. Used and Type (Barrels)	Barrel Size
All	3.8 (231)	Automatic	Rochester	17081194	One-2-bbl	Pri-36.5 (1.4375) Venturi 30.9 (1.218)

Engine — Diesel Information

Glow plug		
Injector nozzle	Type	
	Opening pressure—kPa. (psi)	
Pre-Chamber design		
Fuel injection pump	Manufacturer	
	Type	
Supplementary vacuum source (type)		

MVMA Specifications Form
Passenger Car
METRIC (U.S. Customary)

Car Line MALIBU - MALIBU CLASSIC - EL CAMINO

Model Year 1981 Issued 9-80 Revised (•)

Engine Description/Carb. Engine Code	3.8 Liter V6(229 CID) 2-Bbl Carburetor RPO LC3	4.4 Liter V8(267 CID) 2-Bbl Carburetor RPO L39	5.0 Liter V8(305 CID) 4-Bbl Carburetor RPO LG4

Engine — Cooling System

Coolant recovery system (std., opt., none)			Standard		
Radiator cap relief valve pressure — kPa (psi)			103.4 (15.0)		
Circulation thermostat	Type (choke, bypass)		Choke		
	Starts to open at °C (°F)		91 (195)		
Water pump	Type (centrifugal, other)		Centrifugal		
	GPM 1000 pump rpm				
	Number of pumps		One (1)		
	Drive (V-belt, other)		V-Belt		
	Bearing Type		Sealed double row ball		
By-pass recirculation type (inter., ext.)			Internal		
Radiator core type (cross-flow) vertical, cellular, tube and fin, other)			Cross flow, tube & center		
Cooling System Capacity	With heater — L(qt.) (*)		14.38 (15.19)	17.86 (18.87)	15.68 (16.57)
	Without heater — L(qt.)		Heater standard equipment		
	(@) Opt. equipment-specify — L (qt.)		14.27 (15.08)	17.10 (18.07)	15.62 (16.50)
Water jackets full length of cyl. (yes, no)			Yes		
Water all around cylinder (yes, no)			Yes		
Radiator hose	Lower	Number and type (molded, straight)	One, molded		
		Inside diameter	38.1 (1.50)	38.1 (1.50)	
	Upper	Number and type (molded, straight)	One molded		
		Inside diameter	31.8 (1.25)	31.8 (1.25)	
	By-pass	Number and type (molded, straight)	None		
		Inside diameter	---		
Radiator (Core)	Standard	Width			
		Height			
		Thickness			
	A/C	Width			
		Height			
		Thickness			
	Heavy duty	Width			
		Height			
		Thickness			
Fan (Standard)	Number of blades & type - Flex/Solid		4, staggered		
	Diameter		483 (19.0)		
	Ratio — fan to crankshaft rev.				
	Fan cutout type		None		
	Drive Type-Number of Fans		V-Belt-one		
Fan (optional)	No. of blades and spacing		5, staggered		
	Diameter		508 (20.0)	483 (19.0)	
	Ratio — fan to crankshaft rev.				
	Fan cut-out type		Clutch		
	Drive Type-Number of Fans		V-Belt-one		

(*) Base Transmission
(@_ With Air Conditioning

MVMA Specifications Form
Passenger Car
METRIC (U.S. Customary)

Car Line: MALIBU - MALIBU CLASSIC - EL CAMINO
Model Year: 1981 Issued: 9-80 Revised (•)

Engine Description/Carb. Engine Code	3.8 Liter V-8 (231 CID) 2-Bbl Carburetor LD5

Engine — Cooling System

Coolant recovery system (std., opt., none)			Standard
Radiator cap relief valve pressure — kPa (psi)			103.4 (15)
Circulation thermostat	Type (choke, bypass)		Choke
	Starts to open at °C (°F)		90.6 (195)
Water pump	Type (centrifugal, other)		Centrifugal
	GPM 1000 pump rpm		
	Number of pumps		One (1)
	Drive (V belt, other)		V-belt
	Bearing Type		Sealed double row ball
By pass recirculation type (inter., ext.)			External
Radiator core type (cross-flow, vertical, cellular, tube and fin, other)			Cross flow, tube & center
Cooling System Capacity	With heater — L(qt.) (*)		11.75 (12.41)
	Without heater — L(qt.)		Heater standard equipment
	(@) Opt. equipment-specify — L (qt.)		11.50 (12.15)
Water jackets full length of cyl. (yes, no)			Yes
Water all around cylinder (yes, no)			Yes
Radiator hose	Lower	Number and type (molded, straight)	One, molded
		Inside diameter	38.1 (1.50)
	Upper	Number and type (molded, straight)	One, molded
		Inside diameter	31.8 (1.25)
	By-pass	Number and type (molded, straight)	One, molded
		Inside diameter	
Radiator (Core)	Standard	Width	528.3 (20.8)
		Height	431.0 (17.0)
		Thickness	31.5 (1.24)
	A/C	Width	
		Height	
		Thickness	
	Heavy duty	Width	528.3 (20.8)
		Height	431.0 (17.0)
		Thickness	31.5 (1.24)
Fan (Standard)	Number of blades & type - Flex Solid		5, staggered
	Diameter		508 (20.0)
	Ratio — fan to crankshaft rev		
	Fan cutout type		Clutch
	Drive Type-Number of Fans		V-belt-one
Fan (optional)	No. of blades and spacing		5, staggered
	Diameter		508 (20.0)
	Ratio — fan to crankshaft rev		
	Fan cut out type		Clutch
	Drive Type-Number of Fans		V-belt-one

(*) Base Transmission
(@) With Air Conditioning

MVMA Specifications Form
Passenger Car
METRIC (U.S. Customary)

Car Line MALIBU - MALIBU CLASSIC - EL CAMINO
Model Year 1981 Issued 9-80 Revised (•)

Engine Description/Carb. / Engine Code	3.8L V-6 2-Bbl.	3.8L V-6 2-Bbl	4.4L V-8 2-Bbl.	5.0L V-8 4-Bbl.
	RPO LC3	RPO LD5	RPO L39	RPO LG4

Vehicle Emission Control

Exhaust Emission Control	Type (Air injection, engine modifications, other)			Air Injection w/Computer Command Control
	Air Injection Pump	Type		
		Displacement — cm^3 (in^3)		
		Drive ratio		
		Drive type		
		Relief valve (type)		
		Filter (describe)		
	Air Injection System	Air distribution (head, manifold, etc.)		Exhaust pipe
		Point of entry		Exhaust pipe
		Injection tube i.d.		
		Check valve type		Pressure plate system
		Backfire protection (type)		Diverter valve
	Exhaust Gas Recirculation System	Type (controlled flow, open orifice, other)		Controlled flow
		Valve type		Vacuum modulated shut-off & metering valve
		Valve location		Inlet manifold
		Control energy source		Carburetor vacuum
		Exhaust source		Manifold exhaust crossover
		Exhaust cooler type		None
		Orifice no. and size		One
		Point of exhaust injection (spacer, carburetor, manifold, other)		Inlet manifold
	Catalytic Converter System	Catalyst	Type	Platinum-palladium
			Volume — L (in^3)	4.1 (250)
		Substrate type		Dual bed (*)
		Container location		Beneath RF underbody
	Other	CARBURETOR HOT AIR		Thermostatically controlled air cleaner regulates and mixes heated air with incoming cold air to reduce hydrocarbon emission.

(*) Single bed for LD5, volume 260.

MVMA Specifications Form
Passenger Car
METRIC (U.S. Customary)

Car Line MALIBU - MALIBU CLASSIC - EL CAMINO
Model Year 1981 Issued 9-80 Revised (•)

Engine Description/Carb.	3.8L V-6 2-Bbl	3.8L V-6 2-Bbl	4.4L V-8 2-Bbl	5.0L V-8 4-Bbl
Engine Code	RPO LC3	RPO LD5	RPO L39	RPO LG4

Vehicle Emission Control (Continued)

Crankcase Emission Control	Type (ventilates to atmos., induction system, other)	Standard	Induction system	
		Optional		
	Control Unit	Make and model	A.C.	
		Location	Inlet Manifold	Valve Rocker Cover
		Energy source (manifold vacuum, carburetor, other)	Manifold vacuum	
		Control method (variable orifice, fixed orifice, other)	Variable orifice	
	Complete System	Discharges (to intake manifold, other)	Inlet manifold	
		Air inlet (breather cap, other)	Carburetor air cleaner	
		Flame arrestor (screen, other)	Screen	
Evaporative Emission Control	Fuel Tank	Thermal expansion volume — dm^3 (ft^3)	Approx. 10% of refill capacity	
		Relief Pressure kPa (psi) and location		
		Vacuum relief kPa (psi) and location		
		Vapor-liquid separator type	Integral with fuel tank	
		Vapor vented to (crankcase, canister, other)	Canister	
	Carburetor	Vapor vented to (crankcase, canister, other)	Canister	
	Vapor Storage	Storage provision (crankcase, canister, other)	Canister	
		Volume — dm^3 (ft^3) or capacity (grams)	Approx. 50 grams storage capacity	
		Control valve type	Controlled by orifice, carburetor throttle body and throttle blade position.	

MVMA Specifications Form
Passenger Car
METRIC (U.S. Customary)

Car Line: MALIBU - MALIBU CLASSIC - EL CAMINO
Model Year: 1981 Issued: 9-80 Revised (•)

Engine Description/Carb. Engine Code	3.8 Liter V6(229 CID) 2-Bbl Carburetor	4.4 Liter V8(267 CID) 2-Bbl Carburetor	5.0 Liter V8(305 CID) 4-Bbl Carburetor
	RPO LC3	RPO L39	RPO LG4

Electrical — Supply System

Battery	Make and Model		Delco 'Freedom II'		
	Voltage Rtg.—V—& Total Plates		12 V		
	SAE Designation No. and/or capacity		75 Minute reserve capacity		
	Location		Engine compartment, right front		
Generator or Alternator	Make		Delco Remy		
	Model		1103161	1103162	
	Type and rating		37		
	Output at engine idle (neutral) A				
	Ratio — Gen. to Cr/s rev.		2.73:1		
Regulator	Make		Delco Remy		
	Model				
	Type		Micro circuit unit; integral with distributor		
	Regulated	Voltage			
		Current A			
	Voltage test conditions	Temperature — °C (°F)			
		Load A			
		Other			

Electrical — Starting System

Starting Motor	Make		Delco Remy		
	Model		1109524		1109064
Motor Drive	Engagement Type		Positive shift solenoid		
	Pinion engages from (front, rear)		Rear		
	Number of teeth	Pinion	9		
		Flywheel — Manual	153	---	168
		Flywheel — Auto	153	168	168

MVMA Specifications Form
Passenger Car
METRIC (U.S. Customary)

Car Line: MALIBU - MALIBU CLASSIC - EL CAMINO
Model Year: 1981 Issued: 9-80 Revised (•):

Engine Description/Carb. Engine Code	3.8 Liter V-6 (231 CID) 2-Bbl Carburetor RPO LD5

Electrical — Supply System

Battery	Make and Model		Delco 'Freedom II'
	Voltage Rtg. — V — & Total Plates		12 V
	SAE Designation No. and/or capacity		58 minute reserve capacity
	Location		Engine compartment R.F.
Generator or Alternator	Make		Delco Remy
	Model		1100110
	Type and rating		42
	Output at engine idle (neutral) A		
	Ratio — Gen. to Cr/s rev.		2.36:1
Regulator	Make		Delco Remy
	Model		---
	Type		Micro circuit unit; integral with distributor
	Regulated	Voltage	
		Current A	
	Voltage test conditions	Temperature — °C (°F)	
		Load A	
		Other	

Electrical — Starting System

Starting Motor	Make			Delco Remy
	Model			1109061
Motor Drive	Engagement Type			Positive shift solenoid
	Pinion engages from (front, rear)			Front
	Number of teeth	Pinion		9
		Flywheel	Manual	---
			Auto	160

MVMA Specifications Form
Passenger Car
METRIC (U.S. Customary)

Car Line MALIBU - MALIBU CLASSIC - EL CAMINO
Model Year 1981 Issued 9-80 Revised (•)

Engine Description/Carb. Engine Code	3.8 Liter V6(229 CID) 2-Bbl Carburetor RPO LC3	4.4 Liter V8(267 CID) 2-Bbl Carburetor RPO L39	5.0 Liter V8(305 CID) 4-Bbl Carburetor RPO LG4

Electrical — Ignition System — Distributor

Distributor	Manual	1110754	---	1103443
	Automatic	1110754	1103443	1103443
Timing	Manual	6° BTC	---	NA
	Automatic	6° BTC	6° BTC	6° BTC

Distributor Model	CENTRIFUGAL ADVANCE Crankshaft Degrees at Engine RPM			VACUUM ADVANCE Crankshaft Deg. at kPa (in. of Hg.)	
	Start	Intermediate	Maximum	Start	Maximum
1103443	DOES NOT APPLY				
1110754	0° @ 1200	11° @ 2400	18° @ 4100	0° @ 0.1	16° @ 21.9

MVMA Specifications Form
Passenger Car
METRIC (U.S. Customary)

Car Line MALIBU - MALIBU CLASSIC - EL CAMINO
Model Year 1981 Issued 9-80 Revised (•)

Engine Description/Carb. Engine Code	3.8 Liter V-6 (231 CID) 2-Bbl Carburetor RPO LD5

Electrical — Ignition System — Distributor

Distributor	Manual	---
	Automatic	1111386
Timing	Manual	15
	Automatic	---

Distributor Model	CENTRIFUGAL ADVANCE Crankshaft Degrees at Engine RPM			VACUUM ADVANCE Crankshaft Deg. at kPa (in. of Hg)	
	Start	Intermediate	Maximum	Start	Maximum
1111386		DOES NOT APPLY			

MVMA Specifications Form
Passenger Car
METRIC (U.S. Customary)

Car Line MALIBU - MALIBU CLASSIC - EL CAMINO

Model Year 1981 Issued 9-80 Revised (•)

Engine Description/Carb. Engine Code	3.8 Liter V6(229 CID) 2-Bbl Carburetor	4.4 Liter V8(267 CID) 2-Bbl Carburetor	5.0 Liter V8(305 CID) 4-Bbl Carburetor
	RPO LC3	RPO L39	RPO LG4

Electrical — Ignition System

Type	Conventional — Std., Opt., N.A.		---	
	Transistorized — Std., Opt., N.A.		---	
	Other (specify)		High Energy Ignition (HEI)	
Coil	Make		Delco Remy	
	Model		Integral with distributor	
	Current	Engine stopped — A		
		Engine idling — A		
Spark Plug	Make		AC	
	Model		R45TS	R45TS
	Thread (mm)		14	14
	Tightening torque — N-m (lb. ft.)		20 (15)	
	Gap		1.143 (.045)	1.143 (.045)

Electrical — Suppression

Locations & type	

Electrical — Instruments and Equipment

Speed-ometer	Type	In-line with pointer
	Trip odometer (std., opt., N.A.)	NA
EGR maintenance indicator		NA
Charge Indicator	Type	Tell-tale
	Warning device	NA
Temperature Indicator	Type	Tell-tale
	Warning device	NA
Oil pressure Indicator	Type	Tell-tale
	Warning device	NA
Fuel Indicator	Type	Electric gauge
	Warning device	NA
Wind-shield Wiper	Type — standard	Electric two-speed
	Type — optional	Intermittent windshield wiper system
	Blade length	457 (18.0)
	Swept area — cm^2 ($in.^2$)	Coupes & El Camino 6000 (930.3) Sedans & Wagons 5931 (919.5)
Wind-shield Washer	Type — standard	Push-button
	Type — optional	NA
	Fluid level indicator	NA
Horn	Type	Vibrator
	Number used	Dual-1AW00 models; one (low note) on 1AT00 models
Current draw (A) per horn		4.5-6.5 @ 12.5 volts
Other		Restraint system warning light and buzzer Parking brake and brake failure warning light Optional pkg., includes tachometer, voltmeter, oil pressure and coolant temperature gauges.

MVMA Specifications Form
Passenger Car
METRIC (U.S. Customary)

Car Line: MALIBU - MALIBU CLASSIC - EL CAMINO
Model Year: 1981 Issued: 9-80 Revised (•)

Engine Description/Carb. Engine Code	3.8 Liter V-6 (231 CID) 2-Bbl Carburetor RPO LD5

Electrical — Ignition System

Type	Conventional — Std., Opt., N.A.		---
	Transistorized — Std., Opt., N.A.		---
	Other (specify)		High Energy Ignition (HEI)
Coil	Make		Delco Remy
	Model		Integral with distributor
	Current	Engine stopped — A	
		Engine idling — A	
Spark Plug	Make		AC
	Model		R45TS8
	Thread (mm)		14
	Tightening torque — N·m (lb. ft.)		20 (15)
	Gap		1.143 (.080)

Electrical — Suppression

Locations & type	

Electrical — Instruments and Equipment

Speedometer	Type	
	Trip odometer (std., opt., N.A.)	
EGR maintenance indicator		
Charge Indicator	Type	
	Warning device	
Temperature Indicator	Type	
	Warning device	
Oil pressure Indicator	Type	
	Warning device	
Fuel Indicator	Type	
	Warning device	
Windshield Wiper	Type — standard	
	Type — optional	
	Blade length	
	Swept area — cm^2 ($in.^2$)	
Windshield Washer	Type — standard	
	Type — optional	
	Fluid level indicator	
Horn	Type	
	Number used	
Other		

MVMA Specifications Form
Passenger Car
METRIC (U.S. Customary)

Car Line MALIBU - MALIBU CLASSIC - EL CAMINO
Model Year 1981 Issued 9-80 Revised (•)

Engine Description/Carb. Engine Code	3.8 Liter V6(229 CID) 2-Bbl Carburetor	5.0 Liter V8(305 CID) 4-Bbl Carburetor	4.4 Liter V8(267 CID) 2-Bbl Carburetor
	RPO LC3	RPO LG4	RPO L39

Drive Units — Clutch (Manual Transmission)

Make & type		Chevrolet, single dry disc		
Type pressure plate springs		Diaphragm		
Total spring load — N (lb.)		9341-10230 (2100-2300)		
No. of clutch driven discs		ONE		
Clutch facing	Material	Woven type asbestos		
	Manufacturer	Chevrolet		
	Part Number			
	Rivets/Plate	40		
	Rivet size	4.75 x 5.28 (.187 x .208)		
	Outside & inside dia.	262.6 x 165.1 (10.34 x 6.50)		
	Total eff. area-cm^2 (in.^{2})	655.2 (101.58)		
	Thickness	3.43 (.135)		
	Engagement Cushion method	Flat spring steel between facings		
Release bearing	Type & method of lubrication	Single row ball, packed & sealed		
Torsional damping	Method: springs, friction material	Coil springs		

Drive Units — Transmissions

Manual 3-speed (std., opt., N.A.)	Std.	N.A.	N.A.
Manual 4-speed (std., opt., N.A.)	N.A.	Available	N.A.
Manual 5-speed (std., opt., N.A.)	N.A.	N.A.	N.A.
Manual overdrive (std., opt., N.A.)	N.A.	N.A.	N.A.
Automatic (std., opt., N.A.)	Available	Available	Available
Automatic overdrive (std., opt., N.A.)	N.A.	N.A.	N.A.

Drive Units — Manual Transmission

Number of forward speeds			3	4	
Transmission ratios	In first		3.50	2.85	
	In second		1.89	2.02	
	In third		1.00	1.35	
	In fourth		---	1.00	
	In fifth		---	---	
	In overdrive		---	---	
	In reverse		3.62	2.85	
Synchronous meshing, specify gears			All forward		
Shift lever location			Floor mounted		
Lubricant	Capacity — L (pt.)		1.4 (3.0)	1.6 (3.4)	
	Type recommended		GL-5 gear lubricant		
	SAE viscosity number	Summer	80W or 80W-90		
		Winter	80W or 80W-90		
		Extreme cold	80W or 80W-90		

MVMA Specifications Form
Passenger Car
METRIC (U.S. Customary)

Car Line MALIBU - MALIBU CLASSIC - EL CAMINO
Model Year 1981 Issued 9-80 Revised (•)

Engine Description/Carb. Engine Code	3.8 Liter V-6 (231 CID) 2-Bbl Carburetor RPO LD5

Drive Units — Clutch (Manual Transmission)

Make & type		
Type pressure plate springs		
Total spring load — N (lb.)		
No. of clutch driven discs		
Clutch facing	Material	
	Manufacturer	
	Part Number	
	Rivets/Plate	
	Rivet size	
	Outside & inside dia.	
	Total eff. area-cm^2 (in.^{2})	
	Thickness	
	Engagement Cushion method	
Release bearing	Type & method of lubrication	
Torsional damping	Method: springs, friction material	

Drive Units — Transmissions

Manual 3-speed (std., opt., N.A.)	N.A.
Manual 4-speed (std., opt., N.A.)	N.A.
Manual 5-speed (std., opt., N.A.)	N.A.
Manual overdrive (std., opt., N.A.)	N.A.
Automatic (std., opt., N.A.)	Available
Automatic overdrive (std., opt., N.A.)	N.A.

Drive Units — Manual Transmission

Number of forward speeds			
Transmission ratios	In first		
	In second		
	In third		
	In fourth		
	In fifth		
	In overdrive		
	In reverse		
Synchronous meshing, specify gears			
Shift lever location			
Lubricant	Capacity — L (pt.)		
	Type recommended		
	SAE viscosity number	Summer	
		Winter	
		Extreme cold	

MVMA Specifications Form
Passenger Car
METRIC (U.S. Customary)

Car Line MALIBU - MALIBU CLASSIC - EL CAMINO
Model Year 1981 Issued 9-80 Revised (•)

Engine Description/Carb. Engine Code	3.8 L V-6 2-Bbl Carb. RPO LC3	3.8 L V-6 2-Bbl Carb. RPO LD5	4.4 L V-8 2-Bbl Carb. RPO L39	5.0 L V-8 4-Bbl Carb. RPO LG4

Drive Units — Automatic Transmission (See "Power Teams" for transmission usage)

Trade name		3-Speed Automatic		
Type (describe)		Torque converter with planetary gears		
		'200c'	'250c'	'350c'
Selector	Location	Std - steering column; Opt - floor console		
	Ltr./No. Designation	P-R-N-D-2-1		
Gear Ratios	R	2.07	1.93	
	D	1.00	1.00	
	2	1.57	1.52	
	1	2.74	2.52	
	L,			
Max. upshift speed — drive range — km/h (mph)				
Max. kickdown speed-drive range — km/h (mph)				
Min. overdrive speed — km/h (mph)				
Torque Converter	Number of elements	3		
	Max. ratio at stall	2.35	2.0	
	Type of cooling (air, liquid)	Liquid		
	Nominal diameter	298 (11.75)		
Lubricant	Capacity — refill — L (pt.)	3.3 (7.0)	2.8 (6.0)	
	Type recommended	Dexron II		
Special transmission features		Torque converter clutch, 3rd gear lock-up		

Drive Units — Axle or Front Wheel Drive Unit

Type (front, rear)			Rear
Description			Semi-floating axle, overhung hypoid drive pinion & ring gear
Limited Slip differential, type			Disc clutch
Drive Pinion Offset			38.1 (1.50)
Drive pinion type			Hypoid gear
No. of differential pinions			Two
Pinion adjustment (shim, other)			Shim
Pinion bearing adj. (shim, other)			Collapsible sleeve
Driving wheel bearing type			Direct or single row cylindrical
Lubricant	Capacity — L (pt.)		1.6 (3.5)
	Type recommended		GL-5 Gear Lubricant
	SAE viscosity number	Summer	80W or 80W-90
		Winter	80W or 80W-90
		Extreme cold	80W or 80W-90

Axle or Transaxle Ratio and Tooth Combinations (See "Power Teams" for axle ratio usage.)

Axle Ratio or Overall Ratio (:1)		2.29	2.41	2.56	2.73	3.08
No. of teeth	Pinion	17	17	16	15	13
	Ring gear or gear	39	41	41	41	40
Ring Gear O. D.		7.50				
Transaxle	Transfer Gear Ratio					
	Final Drive Ratio					

MVMA Specifications Form
Passenger Car
METRIC (U.S. Customary)

Car Line MALIBU - MALIBU CLASSIC - EL CAMINO

Model Year 1981 Issued 9-80 Revised (•)

Engine Description / Carb. Engine Code	3.8 L V-6 (229) 2-Bbl RPO LC3	3.8 L V-6 (231) 2-Bbl RPO LD5	4.4 L V-8 (267) 2-Bbl RPO L39	5.0 L V-8 (305) 4-Bbl RPO LG4

Drive Units — Propeller Shaft — Conventional Drive

Type (straight tube, tube-in-tube, internal-external damper, etc.)			Straight tube			
Outer diam. x length* x wall thickness	Manual 3-speed trans.		Same as Automatic	N.A.		
	Manual 4-speed trans.					Same as Automatic
	Manual 5-speed trans.		N.A.			
	Overdrive		N.A.			
	Automatic transmission		Model 27-69-35-63.5 x 1331.5 x 1.65 (2.5 x 52.4 x .065) Model 80 -82.6 x 1560.1 x 1.65 (3.25 x 61.4 x .065)			
Intermediate bearing	Type (plain, anti-friction)		None			
	Lubrication (fitting prepack)		---			
Slip Yoke	Type		Yoke			
	Number of teeth		27			
	Spline O.D.					
Universal joints	Make and Mfg. No.	Front	Saginaw 44			
		Rear				
	Number used		Two			
	Type (ball and trunnion, cross)		Single Cardan			
	Rear attach (u-bolt, clamp, etc.)		Strap & bolt			
	Bearing	Type (plain, anti-friction)	Anti-friction			
		Lubric. (fitting, prepack)	Prepack			
Drive taken through (torque tube or arms, springs)			Control arms			
Torque taken through (torque tube or arms, springs)			Control arms			

* Center to center of universal joints, or to centerline of rear attachment.

MVMA Specifications Form
Passenger Car
METRIC (U.S. Customary)

Car Line MALIBU - MALIBU CLASSIC - EL CAMINO
Model Year 1981 Issued 9-80 Revised (•)

Engine Description/Carb. Engine Code	Sedan & Coupe	Station Wagon	Sedan Pick-up

Drive Units — Tires And Wheels (Standard)

TIRES	Size, load range, ply		P185/75R14(BW,WW)	P195/75R14(BW,WW)	P205/75R14(BW,WW,WL)
	Type (bias, radial, etc.)		Glass belted radial		Steel belted radial
	Inflation pressure (cold) for recommended max. vehicle load	Front-kPa (psi)	240 (35)	205 (30)	
		Rear-kPa (psi)	240 (35)	240 (35)	
	Rev./mile—at 70 km/h (45 mph)		520 (837)	508 (817)	495 (797)
WHEELS	Type & material		Short spoke disc, steel		
	Rim (size & flange type)		14 x 6		
	Wheel offset		'0'		
	Attachment	Type (bolt or stud)	Stud		
		Circle diameter	120.7 (4.75)		
		Number & size	5 hex nuts - 7/16-20		
Spare tire and wheel (same or other)			15 x 4, 25 mm (1.0 in) offset exc. with limited slip differential Tire - T125/70D15		Same

Drive Units — Tires And Wheels (Optional)

Size, load range, ply		P195/75R14 (WW)	
Type (bias, radial, etc.)		Steel belted radial	
Wheel type & material		Rally type steel	
Rim (size, flange type, and offset)		14 x 6 - '0'	
Size, load range, ply	*	P205/70R14(WW,WL)	
Type (bias, radial, etc.)		steel belted radial	
Wheel type & material			
Rim (size, flange type, and offset)			
Size, load range, ply			
Type (bias, radial, etc.)			
Wheel type & material			
Rim (size, flange type, and offset)			
Size, load range, ply			
Type (bias, radial, etc.)			
Wheel type & material			
Rim (size, flange type, and offset)			
Spare tire and wheel (if configuration is different than road tire or wheel, describe optional spare tire and/or wheel)		Limited slip differential: - Wheel - 16 x 4, 12 mm (0.50 in) offset Tire - P145/80D16	

Brakes — Parking

Type of control		Foot pedal - application; 'T' handle - release
Location of control		Left of steering column under instrument panel
Operates on		Rear service brakes
If separate from service brakes	Type (internal or external)	---
	Drum diameter	---
	Lining size (length x width x thickness)	---

* - Required with RPO F41 Sport Suspension.

MVMA Specifications Form
Passenger Car
METRIC (U.S. Customary)

Car Line: MALIBU - MALIBU CLASSIC - EL CAMINO
Model Year: 1981 Issued: 9-80 Revised (•)

Body Type And/Or Engine Displacement

Coupe, Sedan, Station Wagon, & El Camino

Brakes — Service

Brake Type (std., Opt., N.A.)	Drum	Front		N.A.
		Rear		Std.
	Disc	Front		Std.
		Rear		N.A.
Self-adjusting (std., opt., N.A.)				Std.
Special Valving	Type (proportion, delay, metering, other)			Metering & proportioning
Power Brake (std., opt., N.A.)				Std.
Booster Type (remote, integral, vac., hyd., etc.)				Integral
Anti-skid device type (std., opt., N.A.)				N.A.
Effective area — cm^2 ($in.^2$)•				615.5 (95.42)
Gross lining area — cm^2 ($in.^2$)••				(107.22)
Swept area — cm^2 ($in.^2$)•••				1985.1 (307.7)
Rotor	Outer working diameter		F	266.7 (10.5)
			R	--
	Inner working diameter		F	171.5 (6.75)
			R	--
	Thickness		F	26.2 (1.03)
			R	--
	Material & type (vented/solid)		F	Cast iron, vented
			R	--
Drum	Diameter (nominal)		F	--
			R	241 (9.5)
	Type and material•			Cast iron, finned
Wheel cylinder bore	Front			63.5 (2.50)
	Rear			19.1 (0.75)
Master Cylinder	Bore			24.0 (0.94)
	Stroke			
Pedal arc ratio				3.5:1
Line pressure at 445 N (100 lb.) pedal load—MPa (psi)				
Lining Clearance Per Shoe	Front			Self adjusting
	Rear			Self adjusting
Brake lining	Front Wheel	Bonded or riveted, rivets/seg.		Riveted, 8
		Rivet size		5.33 x 7.92 (.210 x .312)
		Manufacturer		Delco Moraine
		Lining Code		
		Material		Molded asbestos
		•••• Size	Prim. or out-board	125 x 48.4 x 11.04 (4.92 x 1.91 x .435)
			Second or in-board	124 x 48.4 x 11.04 (4.92 x 1.91 x .435)
		Shoe thickness (no lining)		Inboard-15.84 (.620); Outboard-13.97 (.550)
	Rear Wheel	Bonded or riveted, rivets/seg.		Riveted - 10 primary, 12 secondary
		Manufacturer		Delco Moraine
		Lining Code		
		Material		Molded asbestos
		•••• Size	Prim. or out-board	192.5 x 50.8 x 4.98 (7.58 x 2.0 x 0.196)
			Second or in-board	249.6 x 50.8 x 6.75 (9.83 x 2.0 x 0.266)
		Shoe thickness (no lining)		9.7 (0.380)

•Excludes rivet holes, grooves, chamfers, etc.
••Includes rivet holes, grooves, chamfers, etc.
•••Total swept area for four brakes. (Drum brake: Widest lining contact width for each brake x its contact circumference.) (Disc brake: Square of Outer Working Dia. minus Square of Inner Working Dia. multiplied by PI/2 for each brake.)
••••Size for drum brakes includes length x width x thickness.

MVMA Specifications Form
Passenger Car
METRIC (U.S. Customary)

Car Line MALIBU - MALIBU CLASSIC - EL CAMINO
Model Year 1981 Issued 9-80 Revised (•)

Steering

				Sedan & Coupe W/V-8 Engine	Wagon/Pickup W/V-6 Engine	Sedan & Coupe W/V-6 Engine	Wagon/Pickup W/V-8 Engine
Manual (std., opt., N.A.)				Std.			
Power (std., opt., N.A.)				Opt. (a)			
Adjustable steering wheel (tilt, swing, other)		Type and description		Tilt-Universally jointed steering shaft at base of steering wheel - 6 positions			
		(Std., opt., N.A.)		Opt.			
Wheel diameter		Manual		387 (15.25)			
		Power		387 (15.25)			
Turning diameter m (feet)	Outside front	Wall to wall (l. & r.)		12.2 (40.0)			13 (42.6)
		Curb to curb (l. & r.)		11.3 (37.1)			12.2 (40.0)
	Inside rear	Wall to wall (l. & r.)					
		Curb to curb (l. & r.)					
Manual	Gear	Type		Semi-reversible, recirculating ball nut			
		Make		Saginaw Steering Gear			
		Ratios	Gear	24:1			
			Overall	28:1			
	No. wheel turns (stop to stop)			5.3			
Power	Type (coaxial, linkage, etc.)			Integral gear with power piston & vane type pump			
	Make			Saginaw Steering Gear			
	Gear	Type		Semi-reversible recirculating ball nut			
		Ratios	Gear	15:1	15:1	16/13:1	15/13:1
			Overall	16.5:1	17.5:1	17.6:1	16.4:1
	Pump driven by			'V' belt			
	No. wheel turns (stop to stop)			3.3			3.2
Linkage	Type			Parallelogram			
	Location (front or rear of wheels, other)			Front			
	Drag links (trans. or longit.)			None			
	Tie rods (one or two)			Two			
Steering Axis	Inclination at camber (deg.)			7.86			
	Bearings (type)	Upper		Ball stud			
		Lower		Ball stud			
		Thrust		None			
Steering spindle & joint type				Forging with pad for mounting brake cylinder spherical			
Wheel Spindle	Diameter	Inner bearing		31.7474-31.7271 (1.25)			
		Outer bearing		21.0471-21.4274 (0.83-0.84)			
	Thread size			3/4-20 UNEF-3A(Modified)			
	Bearing type			Tapered roller			
Wheel Align at curb mass (wt.)	Service checking	Caster (deg.)					
		Camber (deg.)					
		Toe-in [outside track-mm (in.)]					
	Service reset	Caster					
		Camber					
		Toe-in					
	Periodic M.V. Inspection	Caster					
		Camber					
		Toe-in					

(a) Required option for all V-8 engine equipped vehicles. Required with V-6 engine equipped vehicles with Air Conditioning.

MVMA Specifications Form
Passenger Car
METRIC (U.S. Customary)

Car Line MALIBU - MALIBU CLASSIC - EL CAMINO
Model Year 1981 Issued 9-80 Revised (•)

Body Type And/Or Engine Displacement

		Sedan & Coupe	Station Wagon	Sedan Pick-up

Suspension — General

Car leveling	Standard/Optional/NA	N.A		Std (Rear only)
	Type (air, hyd., etc.)	--		Air
	Manual/auto. controlled	--		Manual
Provision for brake dip control		Front suspension geometry		
Provision for acc. squat control		Rear suspension geometry		
Special provisions for car jacking		Side lift frame body bolt access holes on each side of frame at #2 & #4 body mounting access holes		
Shock absorber front & rear	Type	Direct, double acting, hydraulic		
	Make	Delco		
	Piston dia.	25 (1.0)		
Other special features				

Suspension — Front

Type and description		Independent SLA		
Travel	Full Jounce	90 (3.54)		
	Full Rebound	92 (3.62)		
Spring	Type (coil, leaf, other)	Coil		
	Material	Steel alloy		
	Size (coil design height & I.D., bar length x dia.)	260 x 102.9 x 2953 x 15.6	260 x 102.9 x 2548 x 15.6	260 x 102.9 x 273[illegible] x 16.0
	Spring rate — N/mm (lb./in.)	52.5 (300)	64 (365)	
	Rate at wheel — N/mm (lb./in.)	15.6 (89)	18.6 (106)	
Stabilizer	Type (link, linkless, frameless)	Link		
	Material & bar diameter	Steel-25(0.98) RPO F41-32(1.26)	V-6-27(1.06) V-8-28 (1.10)	Less RPO F41-27(1.06) with RPO F41-28(1.10)

Suspension — Rear

Type and description		Salisbury, 4-Link		
Drive and torque taken through		Control arms		
Travel	Full Jounce	107 (4.21)		
	Full Rebound	113 (4.45)		
Spring	Type (coil, leaf, other)	Coil		
	Material	Steel alloy		
	Size (length x width, coil design height & I.D., bar length & dia.)	254 x 139.7 x 2428 x 12.8	254 x 139.7 x 2535 x 14.5	254 x 139.7 x 2398 x 13.5
	Spring rate — N/mm (lb./in.)	17.5 (100)	24.5 (140)	21.9 (125)
	Rate at wheel — N/mm (lb./in.)	17.9 (102)	23.4 (133.6)	21.3 (121)
	Mounting insulation type			
	If leaf: No. of leaves	--		
	If leaf: Shackle (comp. or tens.)	--		
Stabilizer	Type (link, linkless, frameless)	Link-included w/RPO F41 Sport Suspension (27-69) (a)		
	Material & bar diameter	Steel - 22 (0.87)		
Track bar type				

(a) Not available with station wagon,sedan, pickup model , P185-75 or P195-75 tires.

MVMA Specifications Form
Passenger Car
METRIC (U.S. Customary)

Car Line MALIBU - MALIBU CLASSIC - EL CAMINO

Model Year 1981 Issued 9-80 Revised (•)

Body Type

4-Door Sedans	2-Door Coupes	Station Wagons	Sedan Pick-up

Body — Miscellaneous Information

Type of finish (lacquer, enamel, other)		Acrylic lacquer
Hood hinge location (front, rear)		Rear
Hood counterbalance (type)		Flat plate coil spring, hold-open linkage
Hood release control (internal, external)		Internal
Vehicle Ident. No. Location		Top left of instrument panel pad
Vent window control method (crank, friction pivot, power)	Front	None
	Rear	Pivot type for sedans and wagons-power optional
Seat cushion type	Front	Formed full foam pad
	Rear	Formed full foam pad
	3rd Seat	--
Seat back type	Front	Formed full foam pad
	Rear	Formed full foam pad
	3rd Seat	--
Method of holding luggage compart. lid open		Boxed hinges with torsion rod
Position of spare tire storage		Sedans and coupes - semi-vertical right rear trunk area
		Station wagons - horizontal, under rear load floor
		El Camino - horizontal, behind passenger's seat

Passive Restraint System

Inflatable Restraint System	Standard/ Optional	
	Type of charging system	
	Location (stg. whl., instru. panel, other)	
Passive Seat Belts	Standard/ Optional	
	Power/ Manual	
	2 or 3 point	
	Knee bar/ Lap belt	

Frame

Type and description (Separate frame, unitized frame, partially-unitized frame)	Full frame, perimeter type

MVMA Specifications Form
Passenger Car
METRIC (U.S. Customary)

Car Line MALIBU - MALIBU CLASSIC - EL CAMINO

Model Year 1981 Issued 9-80 Revised (•)

Body Type			
4-Door Sedan	2-Door Coupes	Station Wagons	Sedan Pick-up

Convenience Equipment

Power windows	Side Windows	Optional
	Vent Windows	Rear vent windows for sedans and wagons - optional
	Backlight or tailgate	Optional
Power seats (specify type as well as availability)		Optional - 6-way power bench seat, all Malibu Classic models 6-way 55/45 power bench seat, power driver seat only (a)
Reclining front seat back (R-L or both)		NA
Radios (specify type as well as availability)		Optional-AM-push-button, AM/FM-push-button, AM/FM stereo AM/FM radio with stereo 8-track tape (b) (c)
Rear seat speaker		Optional, not available with El Camino
Power antenna		Optional
Clock		Optional
Air Conditioner (specify type)		Optional - "four season" manual control
Speed warning device		NA
Speed control device		Optional with automatic transmission
Ignition lock lamp		NA
Dome lamp		Standard
Glove compartment lamp		Standard 1AW69, 27, 35, 80 - Optional 1AT69, 27, 35
Luggage compartment lamp		Optional except 35 and 80 models
Underhood lamp		Optional
Courtesy lamp		Standard 1AW69, 27, 35, 80 - Optional 1AT69, 27, 35
Map lamp		NA
Cornering lamp		NA
Rear window defroster electrically heated		Optional - not available with El Camino
Rear window defogger		Optional (69-27 models only)
Theft protection — type		Lock mounted on steering column; locks steering wheel, Transmission shift lever and ignition
Ash tray lamp		Standard 1AW00 models, optional 1AT00 models

(a) - Models 1AW69, 27, 35 & 80

(b) - AM/FM stereo radio with stereo cassette player

(c) - Stereo equipment includes 2 front and 2 rear speakers.
El Camino, front only.

MVMA Specifications Form
Passenger Car
METRIC (U.S. Customary)

Car Line MALIBU - MALIBU CLASSIC - EL CAMINO
Model Year 1981 Issued 9-80 Revised (•)

Model	Vehicle Mass (Weight)							
	CURB MASS, kg. (Weight, lb.)*			% PASS. MASS DISTRIBUTION				SHIPPING MASS, kg (Weight lb)**
	Front	Rear	Total	Pass. In Front		Pass. In Rear		
				Front	Rear	Front	Rear	
MALIBU								
4-Door Sedan 1AT69	759.9	657.8	1417.7					1375.8
	(1675)	(1450)	(3125)					(3033)
2-Door Coupe 1AT27	764.7	651.4	1416.1					1374.2
	(1686)	(1436)	(3122)					(3029)
4-Door, 2-Seat Station Wagon 1AT35	741.1	750.1	1491.2					1448.7
	(1634)	(1654)	(3288)					(3194)
MALIBU CLASSIC								
4-Door Sedan 1AW69	767.2	664.2	1431.4					1389.5
	(1691)	(1464)	(3155)					(3063)
2-Door Coupe 1AW27	772.6	658.2	1430.8					1388.9
	(1703)	(1451)	(3154)					(3062)
4-Door, 2-Seat Station Wagon 1AW35	746.5	755.6	1502.1					1459.6
	(1646)	(1666)	(3312)					(3218)
EL CAMINO								
2-Door, Sedan Pick-up 1AW80	829.2	635.9	1465.1					1424.3
	(1828)	(1402)	(3230)					(3140)

Curb Weight - The calculated weight of a vehicle with standard equipment, only as designed with the additional load of oils, lubes, coolants, and fuel all filled to capacity.

Shipping Weight - Same as base curb weight except 3 gallons of gasoline.

*Reference — SAE J1100a, Motor Vehicle Dimensions, Curb Weight Definition.
**Shipping Mass (Weight) definition —

MVMA Specifications Form
Passenger Car
METRIC (U.S. Customary)

Car Line MALIBU-MALIBU CLASSIC-EL CAMINO

Model Year 1981 Issued 9-80 Revised (•)

Optional Equipment Differential Mass (Weight)*

Equipment	MASS, kg (Weight, lb) Front	Rear	Total	Remarks
Air Conditioning 4-Season	26.0 (+57.4)	2.2 (+4.8)	28.2 (+62.2)	With RPO LD5 V6 Engine
	33.6 (+74.0)	2.6 (+5.8)	36.2 (+79.8)	With RPO LC3 V6 Engine
	26.6 (+58.6)	2.0 (+4.4)	28.6 (+63.0)	With RPO LG4 & L39 V8 Engine
Electric Door Locks	1.2 (+ 2.6)	0.8 (+1.8)	2.0 (+ 4.4)	2-Door Models
	1.4 (+ 3.0)	1.4 (+3.0)	2.8 (+ 6.0)	4-Door Models
Power Tailgate Release	0 (0)	1.0 (+2.2)	1.0 (+ 2.2)	Station Wagons
Vinyl Roof Cover (Padded)	1.0 (+ 2.2)	1.2 (+2.6)	2.2 (+ 4.8)	2-Door Models
	1.0 (+ 2.2)	1.0 (+2.2)	2.0 (+ 4.4)	4-Door Models
Floor Mats-Front & Rear	2.2 (+ 4.8)	1.4 (+3.0)	3.6 (+ 7.8)	All Except 80 Models
Floor Mats - Front Only	1.6 (+ 3.6)	0.6 (+1.4)	2.2 (+ 5.0)	80 Model, El Camino
Special Front & Rear Suspension	2.6 (+ 5.8)	7.0 (+15.4)	9.6 (+21.2)	All Exc. 35 & 80 Models
Wheel Trim Covers	1.2 (+ 2.6)	1.2 (+2.6)	2.4 (+ 5.2)	Optional on 1AT69, 27 Models
Bumper Impact Strips	1.2 (+ 2.6)	1.2 (+2.6)	2.4 (+ 5.2)	Sedans & Coupes
	1.0 (+ 2.2)	1.0 (+2.2)	2.0 (+ 4.4)	Wagons & El Camino
Bumper Guards Front & Rear	1.4 (+ 3.0)	1.6 (+3.6)	3.0 (+6.6)	Sedans & Coupes
	1.6 (+ 3.6)	1.8 (+4.0)	3.4 (+ 7.6)	Wagons & El Camino

*Also see Engine — General Section for dressed engine mass (weight).

MVMA Specifications Form
Passenger Car
METRIC (U.S. Customary)

Car Line MALIBU-MALIBU CLASSIC-EL CAMINO

Model Year 1981 Issued 9-80 Revised (•)

Optional Equipment Differential Mass (Weight)*

Equipment	MASS, kg. (Weight, lb.) Front	Rear	Total	Remarks
Roof Luggage Carrier	1.4	5.2	6.6	Station Wagons
	(+ 3.0)	(+11.4)	(+14.4)	
Front Compartment Console	2.2	0.6	2.8	With 3 & 4 Speed Transmission
	(+ 4.8)	(+1.4)	(+ 6.2)	
	4.4	1.6	6.0	With Automatic Transmission
	(+ 9.8)	(+3.6)	(+13.4)	
Radio AM Push-Button	2.2	0.2	2.4	
	(+ 4.8)	(+0.4)	(+ 5.2)	
Radio AM/FM Push-Button	2.6	0.4	3.0	
	(+ 5.8)	(+0.8)	(+ 6.6)	
Radio AM/FM Stereo	3.6	1.0	4.6	Sedans & Coupes
	(+ 8.0)	(+2.2)	(+10.2)	
	3.2	0.8	4.0	
	(+ 7.0)	(+1.8)	(+ 8.8)	Station Wagons & El Camino
Radio AM/FM Stereo W/8-Track Tape Player	5.2	1.0	6.2	Sedans & Coupes
	(+11.4)	(+2.2)	(+13.6)	
	5.0	0.8	5.8	Station Wagons
	(+11.0)	(+1.8)	(+12.8)	
	4.8	0.4	5.2	El Camino
	(+10.6)	(+0.8)	(+11.4)	
Radio AM/FM Stereo W/Cassette Tape Player	4.6	1.6	6.2	
	(+10.2)	(+3.6)	(+13.8)	
Auxiliary Speaker- Rear	0	1.0	1.0	
	(0)	(+2.2)	(+ 2.2)	
Rear Seat Speakers-Dual	0	2.0	2.0	
	(0)	(+4.4)	(+ 4.4)	
Rally Wheels	3.6	3.6	7.2	1AT27-69
	(+ 8.0)	(+8.0)	(+16.0)	
	2.8	2.8	5.6	1AT & 1AW35, 1AW27 & 69
	(+ 6.2)	(+6.2)	(+12.4)	
	0.8	0.8	1.6	1AW80
	(+ 1.8)	(+1.8)	(+ 3.6)	

*Also see Engine — General Section for dressed engine mass (weight).

MVMA Specifications Form
Passenger Car
METRIC (U.S. Customary)

Car Line MALIBU-MALIBU CLASSIC-EL CAMINO
Model Year 1981 Issued 9-80 Revised (•)

Optional Equipment Differential Mass (Weight)*

Equipment	MASS, kg. (Weight, lb.) Front	Rear	Total	Remarks
3.8 Liter-V6, (231 CID)	36.6	5.6	42.2	Sedans & Coupes
RPO LD5	(+80.6)	(+12.4)	(+93.0)	
	23.2	1.6	24.8	Station Wagons & El Camino
	(+51.2)	(+3.6)	(+54.8)	
4.4 Liter-V8, (267 CID)	54.0	8.8	62.8	Sedans & Coupes
RPO L39	(+119.0)	(+19.4)	(+138.4)	
	56.0	9.2	65.2	Station Wagons
	(+123.4)	(+20.2)	(+143.6)	
	53.4	8.6	62.0	El Camino
	(+117.8)	(+19.0)	(+136.8)	
5.0 Liter-V8 (305 CID)	42.0	4.8	46.8	Sedans & Coupes
RPO LG4	(+92.6)	(+10.6)	(+103.2)	
	40.6	4.6	45.2	Station Wagons
	(+89.6)	(+10.2)	(+99.8)	
	38.0	4.2	42.2	El Camino
	(+83.8)	(+9.2)	(+93.0)	
Automatic Transmission	16.2	5.4	21.6	Sedans & Coupes, Wagons & El Camino
(RPO MV4)	(+35.8)	(+12.0)	(+47.8)	V8 (RPO LG4)
	9.0	4.4	13.4	Sedans & Coupes, Wagons & El Camino
	(+19.8)	(+9.8)	(+29.6)	V8 (RPO L39)
Automatic Transmission	4.6	1.6	6.2	Sedans & Coupes, Wagons & El Camino
(RPO MV9)	(+10.2)	(+3.6)	(+13.8)	V6 (RPO LC3 & LD5) V8 (LG4 & L39)
Automatic Transmission	11.8	2.6	14.4	Sedans & Coupes, Wagons & El Camino
(RPO M31)	(+26.0)	(+5.8)	(+31.8)	V6 (RPO LC3 & LD5), V8 (LG4 & L39)

*Also see Engine — General Section for dressed engine mass (weight).

MVMA Specifications Form
Passenger Car
METRIC (U.S. Customary)

Car Line MALIBU - MALIBU CLASSIC - EL CAMINO
Model Year 1981 Issued 9-80 Revised (•)

Car and Body Dimensions See Key Sheets for definitions

All dimensions to ground are for comparative purposes only. Dimensions are to be shown for all base body models of each car line.
SAE Ref. No. refers to the definition published in SAE Recommended Practice.
J1100a "Motor Vehicle Dimensions," unless otherwise specified.

Body Type

	SAE Ref. No.	4-Door Sedans	2-Door Coupes	Station Wagons	Sedan Pick-up
Width					
Tread — Front	W101	1486 (58.5)			
Tread — Rear	W102	1467 (57.8)			
Vehicle width	W103	1837 (72.3)		1826 (71.9)	
Body width at Sg RP — front	W117	1774(69.8)	1776(69.9)	1774(69.8)	1776(69.9)
Vehicle width — front doors open	W120	3376(132.9)	4002(157.6)	3376(132.9)	4002(157.6)
Vehicle width — rear doors open	W121	3225(127.0)	--	3225(127.0)	--
Length					
Wheelbase	L101	2745(108.1)			2974(117.1)
Vehicle length	L103	4895(192.7)		4911(193.4)	5121(201.6)
Overhang — front	L104	915(36.0)			
Overhang — rear	L105	1235(48.6)		1251(49.3)	1232(48.5)
Upper structure length	L123	2603(102.5)	2544(100.2)	3261(128.4)	1500(59.1)
Rear wheel C/L "X" coordinate	L127	2377(93.6)			
Cowl point "X" coordinate	L125	158 (6.2)			
Height **					
Passenger Distribution (frt./rear)	PD1,2,3	**			
Trunk/Cargo load		**			
Vehicle height	H101	1414(55.7)		1419(55.8)	1409(55.5)
Cowl point to ground	H114	983(38.7)		987(38.8)	
Deck point to ground	H138				
Rocker panel front to ground	H112	228 (9.0)		234 (9.2)	
Bottom of door closed - front to grd.	H133				
Rocker panel rear to ground	H111	237 (9.3)		243 (9.6)	245 (9.6)
Bottom of door closed - rear to grd.	H135				
Ground Clearance **					
Front bumper to ground	H102	349 (13.7)		351 (13.8)	
Rear bumper to ground	H104	357 (14.0)		353 (13.9)	356 (14.0)
Bumper to ground — front at curb mass (wt.)	H103	370 (14.6)			
Bumper to ground — rear at curb mass (wt.)	H105	378 (14.9)		369 (14.5)	371 (14.6)
Angle of approach @ GVW	H106	23.3°		23.5°	
Angle of departure @ GVW	H107	16.5°		16.7°	17.5°
Ramp breakover angle @ GVW	H147	15.0°		15.4°	14.5°
Rear axle differential to ground	H153	294 (11.6)		295 (11.6)	309 (12.2)
Min. running ground clearance	H156	153 (6.0)		158 (6.2)	160 (6.3)
Location of min. run. grd. clear.		Rear Shock Absorber Bracket			

All linear dimensions are in millimeters (inches) and all mass (weight) specifications are in kilograms (pounds).

** All vehicle height and ground clearances are made using EPA loaded vehicle weight, loading conditions.

EPA LOADED VEHICLE WEIGHT is the base vehicle weight plus all coolant and fluids necessary for operation plus 100% of the fuel capacity, plus the weight of all options and accessories which weigh three pounds or more and which are sold on at least 33% of the car line, plus two occupants.

MVMA Specifications Form
Passenger Car
METRIC (U.S. Customary)
Car and Body Dimensions See Key Sheets for definitions

Car Line MALIBU - MALIBU CLASSIC - EL CAMINO

Model Year 1981 Issued 9-80 Revised (*)

	SAE Ref. No.	Body Type: 4-Door Sedans		2-Door Coupes	
Front Compartment		1AT69	1AW69	1AT27	1AW27
Sg RP front, "X" coordinate	L31	1088 (42.8)			
Effective head room	H61	983 (38.7)	977 (38.5)	962 (37.9)	956 (37.6)
Effective T Point head room	H75	990 (39.0)	984 (38.7)	967 (38.1)	961 (37.8)
Max. eff. leg room — accelerator	L34	1086 (42.8)			
Sg RP — front to heel	H30	228 (9.0)			
Design H-point front travel	L17	172 (6.8)			
Shoulder room	W3	1454 (57.2)	1440 (56.7)	1442 (56.8)	1428 (56.2)
Hip room	W5	1326 (52.2)		1313 (51.7)	
** Upper body opening to ground	H50				
Steering Wheel Angle	H18	19.5°			
Back Angle	L40	26.5°			
Rear Compartment					
Sg RP Point couple distance	L50	827 (32.6)		791 (31.1)	
Effective head room	H63	957 (37.7)	951 (37.4)	961 (37.8)	955 (37.6)
Effective T Point head room	H76	963 (37.9)	957 (37.7)	952 (37.5)	946 (37.2)
Min. effective leg room	L51	965 (38.0)		892 (35.1)	
Sg RP — second to heel	H31	298 (11.7)		268 (10.5)	
Knee clearance	L48	44 (1.7)		30 (1.2)	
Compartment room	L3	705 (27.7)		678 (26.5)	
Shoulder room	W4	1450 (57.1)		1411 (55.6)	
Hip room	W8	1412 (55.6)		1384 (54.5)	
** Upper body opening to ground	H51			--	
Luggage Compartment					
Usable luggage capacity — L(cu. ft.)	V1	469 (16.6)			
** Liftover height	H195	807 (31.8)			

All linear dimensions are in millimeters (inches).

** EPA LOADED VEHICLE WEIGHT, LOADING CONDITIONS

ALL INTERIOR DIMENSIONS ARE MEASURED WITH THE SEATING REFERENCE POINT (SgRP) ____ mm (1 SEAT ADJUSTER NOTCH) FORWARD OF REARMOST SEAT POSITION.

MVMA Specifications Form
Passenger Car
METRIC (U.S. Customary)
Car and Body Dimensions See Key Sheets for definitions

Car Line MALIBU - MALIBU CLASSIC - EL CAMINO

Model Year 1981 Issued 9-80 Revised (•) _____

	SAE Ref. No.	Body Type: 4-Door Station Wgons		2-Door Sedan Pick-up
Front Compartment		1AT35	1AW35	1AW80
Sg RP front, "X" coordinate	L31	1088 (42.8)		
Effective head room	H61	985 (38.8)	979 (38.5)	957 (37.7)
Effective T Point head room	H75	990 (39.0)	984 (38.7)	962 (37.9)
Max. eff. leg room — accelerator	L34	1086 (42.8)		
Sg RP — front to heel	H30	228 (9.0)		
Design H-point front travel	L17	172 (6.8)		
Shoulder room	W3	1454 (57.2)	1440 (56.7)	1440 (56.7)
Hip room	W5	1326 (52.2)		1313 (51.7)
** Upper body opening to ground	H50			
Steering Wheel Angle	H18	19.5°		
Back Angle	L40	26.5°		
Rear Compartment				
Sg RP Point couple distance	L50	791 (31.1)		
Effective head room	H63	985 (38.8)	979 (38.5)	
Effective T Point head room	H76	991 (39.0)	985 (38.8)	
Min. effective leg room	L51	912 (35.9)		
Sg RP — second to heel	H31	298 (11.7)		
Knee clearance	L48	12 (0.5)		
Compartment room	L3	687 (27.0)		
Shoulder room	W4	1450 (57.1)		
Hip room	W6	1412 (55.6)		
** Upper body opening to ground	H51			
Luggage Compartment				
Usable luggage capacity — L(cu. ft.)	V1	--		1005.4 (35.5)
** Liftover height	H195	--		640.1 (25.2)

All linear dimensions are in millimeters (inches).

** EPA LOADED VEHICLE WEIGHT, LOADING CONDITIONS

ALL INTERIOR DIMENSIONS ARE MEASURED WITH THE SEATING REFERENCE POINT (SgRP) ____ mm (1 SEAT ADJUSTER NOTCH) FORWARD OF REARMOST SEAT POSITION.

MVMA Specifications Form
Passenger Car
METRIC (U.S. Customary)
Car and Body Dimensions See Key Sheets for definitions

Car Line MALIBU - MALIBU CLASSIC - EL CAMINO

Model Year 1981 Issued 9-80 Revised (•)

	SAE Ref. No.	Body Type: Station Wagon	
		1AT35	1AW35
Station Wagon — Third Seat			
Shoulder room	W85		
Hip room	W86		
Effective leg room	L86	NOT	
Effective head room	H86	APPLICABLE	
Effective T Point head room	H89		
Seat facing direction	SD1		
Station Wagon — Cargo Space			
Cargo length — open — front	L200	2639 (103.9)	
Cargo length — open — second	L201	1840 (72.4)	
Cargo length — closed — front	L202	2064 (81.2)	
Cargo length — closed — second	L203	1265 (49.8)	
Cargo length at belt — front	L204	1852 (72.9)	
Cargo length at belt — second	L205	1023 (40.3)	
Cargo width — wheelhouse	W201	1108 (43.6)	
Rear opening width at floor	W203	1372 (54.0)	
Opening width at belt	W204	1312 (51.6)	
Max. rear opening width above belt	W205	1006 (39.6)	
Cargo height	H201	763 (30.0)	757 (29.8)
Rear opening height	H202	706 (27.8)	
Tail gate to ground height (Curb)	H250		
Front seat back to load floor height	H197		
Cargo volume index — m^3 ($ft.^3$)	V2	2049 (72.4)	2033 (71.8)
Hidden cargo volume — m^3 ($ft.^3$)	V4		
Hatchback — Cargo Space			
Front seat back to load floor height	H197		
Cargo length at front seat Back Height	L208	NOT	
Cargo length at floor — front	L209	APPLICABLE	
Cargo volume index — m^3 ($ft.^3$)	V3		
Hidden cargo volume — m^3 ($ft.^3$)	V4		

A printed or computer tape supplement containing additional car and body dimensions and/or drawings (based in part on SAE J1100a "Motor Vehicle Dimensions") may be available from the manufacturer.

All dimensions are in millimeters (inches).

MVMA Specifications Form
Passenger Car
METRIC (U.S. Customary)

Car Line MALIBU - MALIBU CLASSIC - EL CAMINO

Model Year 1981 Issued 9-80 Revised (•)

Car and Body Dimensions See Key Sheets for definitions

Body Type

4-Door Sedans	2-Door Coupes	Station Wagons	Sedan Pick-up

Vehicle Fiducial Marks

Fiducial Mark Number *	Define Coordinate Location
Front	X - Fiducial mark to vertical base grid line-front, measured horizontally from the base grid line to the front fiducial mark located on top of the front seat adjuster mounting bolt. Y - Fiducial mark to centerline of car-front, width measurement made from centerline of car to fiducial mark located on top of the front seat adjuster mounting bolt. Z - Fiducial mark to horizontal base grid line-front, measured vertically from base grid line to front fiducial mark located on top of the front seat adjuster mounting bolt.
Rear	X - Fiducial mark to vertical base grid line-rear measured horizontally from base grid line to the rear fiducial mark located on rear underbody crossbar. Y - Fiducial mark to centerline of car-rear, width measurement made from centerline of car to fiducial mark located on the rear underbody crossbar. Z - Fiducial mark to horizontal base grid line-rear, measured vertically from base grid line to the rear fiducial mark located on rear underbody crossbar.

	Fiducial Mark Number				
Front	W21	Y	564 (22.2)		
	L54	X	2761 (108.7)		
	H81	Z	490 (19.3)		
	H161	Curb	350 (13.8)		
**	H163	329 (12.9)	333 (13.1)		
Rear	W22	Y	534 (21.0)	560 (22.1)	586 (23.1)
	L55	X	5338 (210.2)	5345 (210.4)	5650 (222.4)
	H82	Z	616 (24.3)	617 (24.3)	671 (26.4)
	H162	Curb	492 (19.3)		547 (21.5)
**	H164	470 (18.5)	475 (18.7)	532 (20.9)	

*Reference — SAE Recommended Practice, J182a, A Motor Vehicle Fiducial Marks — September, 1973.
All linear dimensions are in millimeters (inches).

** EPA LOADED VEHICLE WEIGHT, LOADING CONDITIONS

MVMA Specifications Form
Passenger Car
METRIC (U.S. Customary)

Car Line MALIBU - MALIBU CLASSIC - EL CAMINO

Model Year 1981 Issued 9-80 Revised (•)

Car and Body Dimensions See Key Sheets for definitions

	SAE Ref. No.	Body Type: 4-Door Sedans	2-Door Coupes	Station Wagons	Sedan Pick-up
Glass					
Backlight slope angle	H121	52.0°	56.0°	37.5°	20.0°
Windshield slope angle	H122	55.0°	58.5°	55.0°	58.5°
Tumble-Home	W122	24.5°	23.5°	24.5°	23.5°
Windshield glass exposed surface area — cm^2 ($in.^2$)	S1	8111.1(1257.2)	8786.3(1361.9)	8111.1(1257.2)	8786.3(1361.9)
Side glass exposed surface area — cm^2 ($in.^2$)	S2	9985.6(1547.8)	11467(1777.4)	15637(2423.7)	6944.0(1076.3)
Backlight glass exposed surface area — cm^2 ($in.^2$)	S3	3907(605.6)	6998 (1084.7)	4987.0(773.0)	3314(513.7)
Total glass exposed surface area — cm^2 ($in.^2$)	S4	22003.7(3410.6)	27251.3(4224.0)	28735.1(4453.9)	19044.3(2951.9)
Windshield glass type		Curved - laminated plate			
Side glass type		Curved - tempered plate			
Backlight glass type		Curved - tempered plate			

Lamps and Headlamp Shape *

			4-Door Sedans	Station Wagons	Sedan Pick-up
Height above ground to center of bulb or marker	Headlamp (H127)	Highest **	668 (26.3)	671 (26.4)	
		Lowest	--	--	--
	Tail (H128)	Highest	671 (26.4)	425 (16.7)	426 (16.8)
		Lowest	--	--	--
	Sidemarker	Front	637 (25.1)	640 (25.2)	
		Rear	671 (26.4)	435 (17.1)	420 (16.5)
Distance from C/L of car to center of bulb	Headlamp	Inside			
		Outside **			
	Tail	Inside			
		Outside			
	Directional	Front			
		Rear			
Headlamp Shape			Rectangular		

* Measured at curb mass (weight).
** If single headlamps are used enter here

MVMA Specifications Form
Passenger Car
METRIC (U.S. Customary)

Exterior Car And Body Dimensions — Key Sheet

Exterior Width

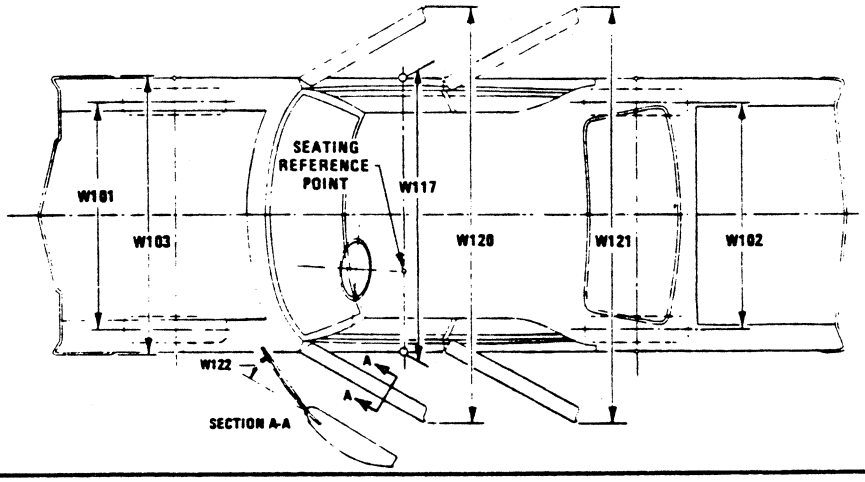

Exterior Length & Height

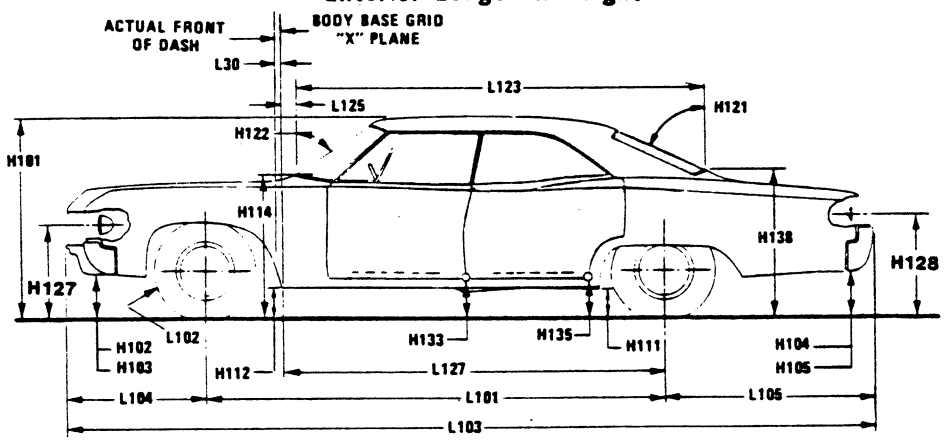

Exterior Ground Clearance

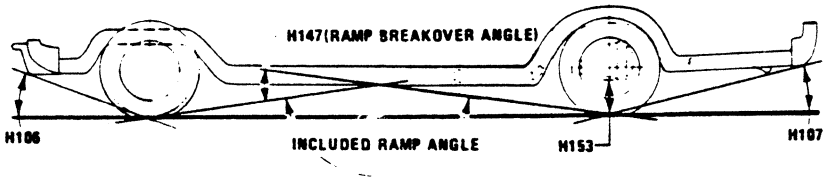

Cargo Space

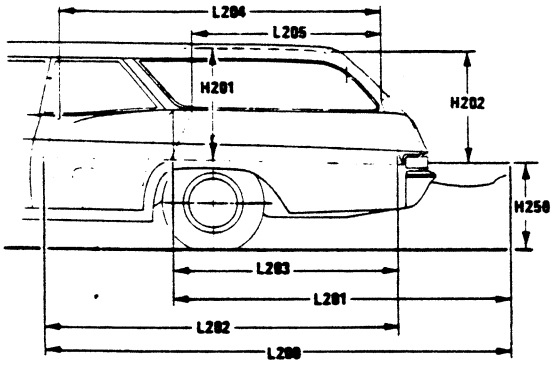

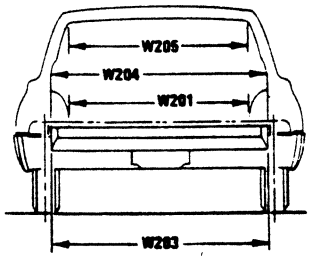

Station Wagon

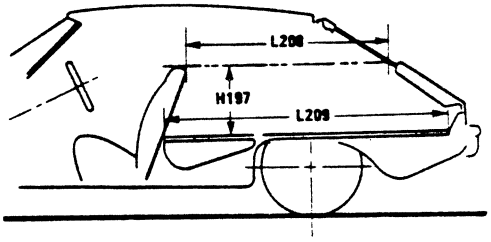

Hatchback

MVMA Specifications Form
Passenger Car
METRIC (U.S. Customary)

Interior Car And Body Dimensions — Key Sheet

Front Compartment

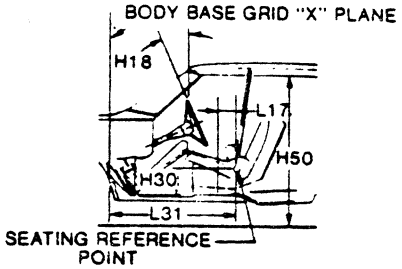

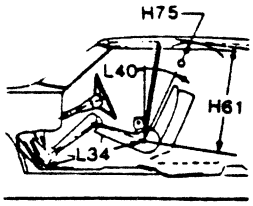

Rear Compartment

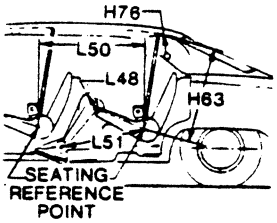

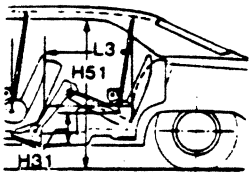

Third Seat

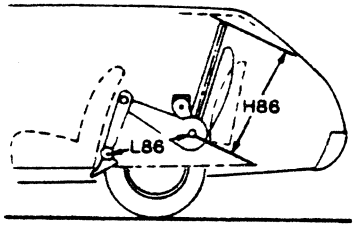

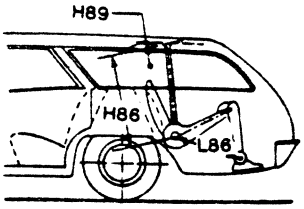

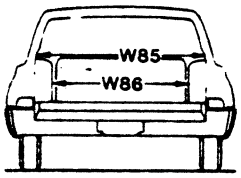

Interior Width

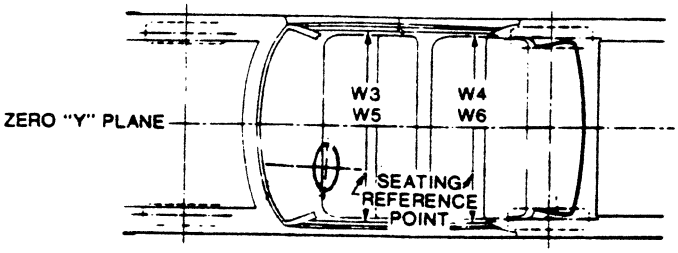

MVMA Specifications Form
Passenger Car
METRIC (U.S. Customary)

Exterior Car And Body Dimensions — Key Sheet
Dimensions Definitions

Seating Reference Point

SEATING REFERENCE POINT means the manufacturer's design reference point which —

(a) Establishes the rearmost normal design driving or riding position of each designated seating position in a vehicle;

(b) Has coordinates established relative to the design vehicle structure;

(c) Simulates the position of the pivot center of the human torso and thigh; and

(d) Is the reference point employed to position the two dimensional templates described in SAE Recommended Practice J826, "Manikins for Use in Defining Vehicle Seating Accommodations," November 1962.

Width Dimensions

W101 TREAD — FRONT. The dimension measured between the tire centerlines at the ground.

W102 TREAD — REAR. The dimension measured between the tire centerlines at the ground. In case of dual wheels, the dimension will be measured to the centerline of tire and wheel assemblies.

W103 VEHICLE WIDTH. The maximum dimension measured between the widest point on the vehicle, excluding exterior mirrors, flexible mud flaps, marker lamps, but including bumpers, moldings, sheet metal protrusions or dual wheels, if standard equipment.

W117 BODY WIDTH AT SgRP — FRONT. The dimension measured laterally between the widest points on the body at the SgRP - front, excluding door handles, applied moldings, or appliques.

W120 VEHICLE WIDTH — FRONT DOORS OPEN. The dimension measured between the widest point on the front doors in maximum hold-open position.

W121 VEHICLE WIDTH — REAR DOORS OPEN. The dimension measured between the widest point on the rear doors in maximum hold-open position. For vehicles with a rear door on only one side, this dimension is to the zero "Y" plane.

W122 TUMBLE HOME. STRAIGHT SIDE GLASS. The angle measured from a vertical to the outside surface of the front door glass at the SgRP "X" plane.
CURVED SIDE GLASS. The angle measured from a vertical to a chord extending from the upper DLO to the lower DLO at the outside surface of the front door glass at the front SgRP "X" plane.

Length Dimensions

L30 FRONT OF DASH "X" COORDINATE. A minus (−) dimension indicates actual front of dash is forward of the zero "X" plane.

L101 WHEELBASE (WB). The dimension measured longitudinally between front and rear wheel centerlines. In case of dual rear axles, the dimension shall be to the midpoint of the centerlines of the rear wheels.

L102 TIRE SIZE. As specified by the manufacturer.

L103 VEHICLE LENGTH. The maximum dimension measured longitudinally between the foremost point and the rearmost point on the vehicle, including bumper, bumper guards, two hooks and/or rub strips, if standard equipment.

L104 OVERHAND — FRONT. The dimension measured longitudinally from the centerline of the front wheels to the foremost point on the vehicle including bumper, bumper guards, two hooks and/or rub strips, if standard equipment.

L105 OVERHAND — REAR. The dimension measured longitudinally from the centerline of the rear wheels; or in the case of dual rear axles, the dimension shall be the midpoint of the centerlines of the rear wheels, to the rearmost point on the vehicle, including rear bumpers, bumper guards, two hooks and rub strips, if standard equipment.

L123 UPPER STRUCTURE LENGTH. The dimension measured longitudinally from the cowl point to the deck point.

L127 REAR WHEEL CENTERLINE "X" COORDINATE or in the case of dual rear axles, the coordinate shall be in the midpoint of the distance between the rear axle centerlines.

L125 COWL POINT "X" COORDINATE.

Height Dimensions

H101 VEHICLE HEIGHT. The dimension measured vertically from the highest point on the vehicle body to ground.

H114 COWL POINT TO GROUND. Measured at zero "Y" plane.

H138 DECK POINT TO GROUND. Measured at zero "Y" plane.

H112 ROCKER PANEL — FRONT TO GROUND. The dimension measured vertically from the foremost point on the bottom of the rocker panels, excluding flanges, to ground.

H132 BOTTOM OF DOOR OPEN — FRONT TO GROUND. The dimension measured vertically from the bottom outside corner of the door on the lock pillar side, in maximum hold-open position, to ground.

H111 ROCKER PANEL — REAR TO GROUND. The dimension measured vertically from the bottom of the rocker or side quarter panel at the front of the rear wheel opening, excluding flanges, to ground.

H134 BOTTOM OF DOOR OPEN — REAR TO GROUND. The dimension measured vertically from the bottom outside corner of the door on the lock pillar side, in maximum hold-open position, to ground.

H135 BOTTOM OF DOOR CLOSED — REAR TO GROUND. The dimension measured vertically from the bottom outside corner of the door on the lock pillar side, in maximum closed position, to ground.

H121 BACKLIGHT SLOPE ANGLE. The angle between the vertical reference line and the surface of backlight at vehicle zero "Y" plane. For curve backlight, the angle is to chord of backlight arc from lower DLO to upper DLO.

H122 WINDSHIELD SLOPE ANGLE. The angle between the vertical reference line and a chord of the windshield are running from the lower DLO to the upper DLO at the vehicle zero "Y" plane. In the case of wrap over glass, the angle to be measured will be formed by a chord 18.0 in. (457 mm) long, drawn from the lower DLO to the intersecting point on the windshield.

H127 HEADLAMP TO GROUND — CURB WEIGHT. The dimensional measured vertically from the centerline of the lowest headlamp lens to ground.

H128 TAILLAMP TO GROUND — CURB WEIGHT. The dimension measured vertically from the centerline of the upper bulb to ground.

Ground Clearance Dimensions

H102 FRONT BUMPER TO GROUND. The minimum dimension measured vertically from the lowest point on the front bumper to ground, including bumper guards, if standard equipment.

H103 FRONT BUMPER TO GROUND — CURB WEIGHT. Measured in the same manner as H104.

H104 REAR BUMPER TO GROUND. The minimum dimension measured vertically from the lowest point on the rear bumper to ground, including bumper guards, if standard equipment.

H105 REAR BUMPER TO GROUND — CURB WEIGHT. Measured in the same manner as H104.

H106 ANGLE OF APPROACH. The angle measured between a line tangent to the front tire static loaded radius are the initial point of structural interference forward of the front tire to ground. The limiting structural component shall be designated.

MVMA Specifications Form
Passenger Car
METRIC (U.S. Customary)
Interior Car And Body Dimensions — Key Sheet
Dimensions Definitions

H107 ANGLE OF DEPARTURE. The angle measured between a line tangent to the rear tire static loaded radius are the initial point of structural interference reaward of the rear tire to ground: The limiting component shall be designated.

H147 REAR BREAKOVER ANGLE. The angle measured between two lines tangent to the front and rear tire static loaded radius and intersecting at a point on the underside of the vehicle which defines the largest ramp over which the vehicle can roll.

H153 REAR AXLE DIFFERENTIAL TO GROUND. The minimum dimension measured from the rear axle differential to ground.

H156 MINIMUM RUNNING GROUND CLEARANCE. The minimum dimension measured from the sprung vehicle to ground. Specify location.

Front Compartment Dimensions

PD1 PASSENGER DISTRIBUTION — FRONT.

L31 SgRP — FRONT "X" COORDINATED.

H61 EFFECTIVE HEAD ROOM — FRONT. The dimension measured along a line 8 deg. rear of vertical from the SgRP — front to the headline, plus 4.0 in. (102 mm).

H75 EFFECTIVE T-POINT HEAD ROOM — FRONT. The minimum radius from the T-point to the headlining plus 30 in. (762 mm).

L34 MAXIMUM EFFECTIVE LEG ROOM — ACCELERATOR. The dimension measured along a line from the ankle pivot center to the SgRP — front plus 10.0 in. (254 mm) measured with right foot on the undepressed accelerator pedal. For vehicles with SgRP to heel (H30) greater than 18 in., the accelerator pedal may be depressed as specified by the manufacturer. If the accelerator is depressed, the manufacturer shall place foot flat on pedal and note the depression of the pedal.

H30 SgRP — FRONT TO HEEL. The dimension measured vertically from the SgRP — front to the accelerator heel point.

L17 DESIGN H-POINT — FRONT TRAVEL. The dimension measured horizontally between the design H-point — front in the foremost and rearmost seat trace positions.

W3 SHOULDER ROOM — FRONT. The minimum dimension measured laterally between the trimmed surfaces on the "X" plane through the SgRP — front within the belt line and 10.0 in. (254 mm) above the SgRP — front.

W5 HIP ROOM — FRONT. The minimum dimension measured laterally between the trimmed surfaces on the "X" plane through the SgRP — front within 1.0 in. (25mm) below and 3.0 (76 mm) above the SgRP — front and 3.0 (76 mm) fore and aft of the SgRP — front.

H150 UPPER BODY OPENING TO GROUND — FRONT. The dimension measured vertically from the trimmed body opening to the ground on the SgRP — front "X" plane.

H18 STEERING WHEEL ANGLE. The angle measured from a vertical to the surface plane of the steering wheel.

L40 BACK ANGLE — FRONT. The angle measured between a vertical line through the SgRP — front and the torso line. If the seatback is adjustable, use the normal driving and riding position specified by the manufacturer.

Rear Compartment Dimensions

PD2 PASSENGER DISTRIBUTION — SECOND.

L50 SgRP COUPLE DISTANCE. The dimension measured horizontally from the driver SgRP — front to the SgRP — second.

H63 EFFECTIVE HEAD ROOM — SECOND. The dimension measured along a line 8 deg. rear of vertical from the SgRP to the headlining, plus 4.0 in. (102 mm).

H76 EFFECTIVE T-POINT HEAD ROOM — SECOND. Measured in the same manner as H75.

L51 MINIMUM EFFECTIVE LEG ROOM — SECOND. The dimension measured along a line from the ankle pivot center to the SgRP — second plus 10.0 in. (254 mm).

H31 SgRP — SECOND TO HEEL. The dimension measured vertically from the SgRP — second to the two dimensional device heel point on the depressed floor covering.

L48 KNEE CLEARANCE — SECOND. The minimum dimension measured from the knee pivot to the back of front seatback minus 2.0 in. (51 mm).

L3 COMPARTMENT ROOM — SECOND. The dimension measured horizontally from the back of front seat to the front of the second seatback at a height tangent to the top of the second seat cushion.

W4 SHOULDER ROOM — SECOND. The minimum dimension measured laterally between trimmed surfaces on the "X" plane through the SgRP — second within 10.0-16.0 in. (254-406 mm) above the SgRP — second.

W6 HIP ROOM — SECOND. Measured in the same manner as W5.

H51 UPPER BODY OPENING TO GROUND — SECOND. The dimension measured vertically from the trimmed body opening to the ground on the "X" plane 13.0 in. (330 mm) forward of the SgRP — second.

Luggage Compartment Dimensions

V1 USABLE LUGGAGE CAPACITY — Total of volumes of individual pieces of standard luggage set plus H-boxes stowed in the luggage compartment in accordance with the procedure described in paragraph 8.2 of SAE-J1100a.

H195 LIFTOVER HEIGHT. The dimension measured vertically from the luggage compartment lower opening at the zero "Y" plane to ground.

Station Wagon — Third Seat Dimensions

PD3 PASSENGER DIRECTION — THIRD

W85 SHOULDER ROOM — THIRD. Measured in the same manner as W5.

W86 HIP ROOM — THIRD. Measured in the same manner as W5.

L86 EFFECTIVE LEG ROOM — THIRD. The dimension measured along a line from the ankle pivot center to the SgRP — third plus 10.0 in. (254 mm).

H86 EFFECTIVE HEAD ROOM — THIRD. The dimension measured along a line 8 deg. from the SgRP — third to the headlining rear of vertical plus a constant of 4.0 in. (102 mm).

H89 EFFECTIVE T-POINT HEAD ROOM — THIRD. Measured in the same manner as H75.

Station Wagon — Cargo Space Dimensions

L200 CARGO LENGTH — OPEN — FRONT. The minimum dimension measured logitudinally from the back of the front seatback at the height of the undepressed floor covering to the rearmost point on the undepressed floor covering on the open tailgate or cargo surface if the rear closure is a conventional door type tailgate, at the zero "Y" plane.

L201 CARGO LENGTH — OPEN — SECOND. The dimension measured logitudinally from the back of the second seatback at the height of the undepressed floor covering on the open tailgate or cargo floor surface if the rear closure is a conventional door type tailgate, at the zero "Y" plane.

L202 CARGO LENGTH — CLOSED — FRONT. The minimum dimension measured horizontally from the back of the front seat at the height of the undepressed floor covering to the rearmost point on the undepressed floor covering on the closed tailgate or tr door for station wagons, trucks and mpv's at the "Y" plane.

MVMA Specifications Form
Passenger Car
METRIC (U.S. Customary)

Interior Car And Body Dimensions — Key Sheet
Dimensions Definitions

L203 CARGO LENGTH — CLOSED — SECOND. The dimension measured horizontally from the back of the second seat at the height of the undepressed floor covering to the rearmost point on the undepressed floor covering on the closed tailgate or taildoor for station wagons, trucks and mpv's at the zero "Y" plane.

L204 CARGO LENGTH AT BELT — FRONT. The minimum dimension measured horizontally from the back of the front seatback at the seatback top to the foremost normal surface of the closed tailgate or inside surface of the cab back panel at the height of the belt, on the zero "Y" plane.

L205 CARGO LENGTH AT BELT — SECOND. The minimum dimension measured horizontally from the back of the second seatback at the seatback top to the foremost normal surface of the closed tailgate at the height of the belt, on the zero "Y" plane.

W201 CARGO WIDTH — WHEELHOUSE. The minimum dimension measured laterally between the trimmed wheelhousings at floor level. For any vehicle not trimmed, measure the sheet metal.

W203 REAR OPENING WIDTH AT FLOOR. The minimum dimension measured laterally between the limiting interferences of the rear opening at floor level.

W204 REAR OPENING WIDTH AT BELT. The minimum dimension measured laterally between the limiting interferences of the rear opening at belt height or top of pick up box.

W205 REAR OPENING WIDTH ABOVE BELT. The minimum dimension measured laterally between the limiting interferences of the rear opening above the belt height.

H201 CARGO HEIGHT. The dimension measured vertically from the top of the undepressed floor covering to the headlining at the rear wheel "X" coordinated on the zero "Y" plane.

H202 REAR OPENING HEIGHT. The dimension measured vertically from the top of the undepressed floor covering to the upper trimmed opening on the zero "Y" plane with rear door fully open.

H250 TAILGATE TO GROUND (CURB WEIGHT). The dimension measured vertically from the top of the undepressed floor covering on the lowered tailgate to ground on the zero "Y" plane.

V2 STATION WAGON

Measured in inches:

$$\frac{W4 \times H201 \times L204}{1728} = Ft.^3$$

Measured in mm:

$$\frac{W4 \times H201 \times L204}{10^9} = m^3 \text{ (cubic meter)}$$

V4 HIDDEN CARGO VOLUME. As specified by the manufacturer.

Hatchback — Cargo Space Dimensions

All hatchback cargo dimensions are to be taken with the front seat in full down and rear position, and the rear seat folded down. The hatchback door is in the closed position. (For electrically adjusted seats, see the manufacturer's specifications for Design "H" Point).

H197 FRONT SEATBACK TO LOAD HEIGHT. The dimension measured vertically from the horizontal tangent to the top of the seatback to the undepressed floor covering.

L208 CARGO LENGTH AT FRONT SEATBACK HEIGHT. The minimum horizontal dimension from the "X" plane tangent to the rearmost surface of the driver's seatback to the inside limiting interference of the hatchback door on the vehicle zero "Y" plane.

L209 CARGO LENGTH AT FLOOR — FRONT — HATCHBACK. The minimum horizontal dimension measured at floor level from the rear of the front seatback to the normal limiting interference of the hatchback door on the vehicle zero "Y" plane.

V3 HATCHBACK.

Measured in inches:

$$\frac{\frac{L208 + L209}{2} \times W4 \times H197}{1728} = Ft.^3$$

Measured in mm:

$$\frac{\frac{L208 + L209}{2} \times W4 \times H197}{10^9} = m^3 \text{ (cubic meter)}$$

MVMA Specifications Form
Passenger Car
METRIC (U.S. Customary)

Index

Subject	Page No.
Alternator	12
Automatic Transmission	16
Axis, Steering	20
Axle, Rear	2, 16
Axle Shafts	17
Battery	12
Bearings, Engine	4, 5, 7
Belts — Fan, Generator, Water Pump	9
Brakes — Parking, Service	18, 19
Camber	20
Camshaft	5
Capacities	
Cooling System	9
Fuel Tank	8
Lubricants	
Engine Crankcase	7
Transmission	15, 16
Rear Axle	16
Car Models	1
Car and Body Dimensions	
Width	26
Length	26
Height	26
Ground Clearance	26
Front Compartment	27
Rear Compartment	27
Luggage Compartment	27
Station Wagon — Third Seat	28
Station Wagon — Cargo Space	28
Hatchback — Cargo Space	28
Carburetor	2, 8, 11
Caster	20
Choke, Automatic	8
Clutch — Pedal Operated	15
Coil, Ignition	14
Connecting Rods	4
Convenience Equipment	23
Cooling System	9
Crankshaft	5
Cylinders and Cylinder Head	3
Diesel Engine	8
Dimension Definitions	
Key Sheet — Exterior	31, 33
Key Sheet — Interior	32, 34, 35
Distributor — Ignition	13
Electrical System	12, 13, 14
Emission Controls	10, 11
Engine	
Bore, Stroke, Type	3
Compression Ratio	2, 3
Displacement	2
Firing Order, Cylinder Numbering	3
General Information, Power & Torque	2, 3
Identification Number Location	22
Lubrication	7
Power Teams	2
Exhaust System	7
Equipment Availability	24
Fan, Cooling	9
Fiducial Marks	29
Filters — Engine Oil, Fuel System	7, 8
Frame	22
Front Suspension	21
Front Wheel Drive Unit	16
Fuel, Fuel Pump, Fuel System	3, 8, 11
Fuel Injection	8
Generator and Regulator	12
Glass	30
Headroom — Body	27, 28
Heights — Car and Body	26
Horns	14
Horsepower — Brake	2
Ignition System	13, 14
Inflation — Tires	18
Instruments	14
Kingpin (Steering Axis)	20
Lamps and Headlamp Shape	30
Legroom	27, 28
Lengths — Car and Body	26
Leveling, suspension	21
Lifters, valve	6
Linings — Clutch, Brake	15, 19
Lubrication	7, 15, 16, 17
Luggage Compartment	27
Mass	27, 28
Models	1
Motor, Starting	15
Muffler	10
Passenger Capacity	1
Passenger Mass Distribution	24
Passive Restraint System	22
Piston Pins & Rings	3, 4
Pistons	3, 4
Power Brakes	19
Power, Engine	2
Power Steering	20
Power Teams	2
Propeller Shaft, Universal Joints	17
Pumps — Oil, Fuel	7, 8
Water	9
Radiator — Cap, Hoses	9
Ratios — Axle	2, 16
Compression	2, 3
Steering	20
Transmission	15, 16
Rear Axle	2, 16
Regulator — Generator	12
Rims	[illegible]
Rings, Piston	[illegible]
Rods — Connecting	[illegible]
Seats	[illegible]
Shock Absorbers, Front & Rear	21
Spark Plugs	14
Speedometer	14
Springs — Front & Rear Suspension	21
Stabilizer (Sway Bar) — Front & Rear	21
Starting System	12
Steering	20
Suppression — Ignition, Radio	14
Suspension — Front & Rear	21
Tail Pipe	7
Theft Protection	23
Thermostat, Cooling	9
Timing — Valve, Ignition	6, 13
Tires	18
Toe in	20
Torque Converter	16
Torque — Engine	2
Transaxle	16
Transmission — Types	2, 8, 15, 16
Transmission — Automatic	2, 8, 15, 16
Transmission — Manual	2, 8, 15
Transmission — Ratios	15, 16
Tread	26
Trunk Cargo Load	1
Trunk Luggage Capacity	27
Turning Diameter	20
Unitized Construction	22
Universal Joints, Propeller Shaft	17
Valves — Intake & Exhaust	6
Vehicle Identification Number	22
Voltage Regulator	12
Water Pump	9
Weights	24, [illegible]
Wheel Alignment	[illegible]
Wheelbase	[illegible]
Wheels & Tires	[illegible]
Wheel Spindle	[illegible]
Widths — Car and Body	26
Windshield	30
Windshield Wiper and Washer	14